BX-4THM4DA-1 Thermocouple In/Current Out

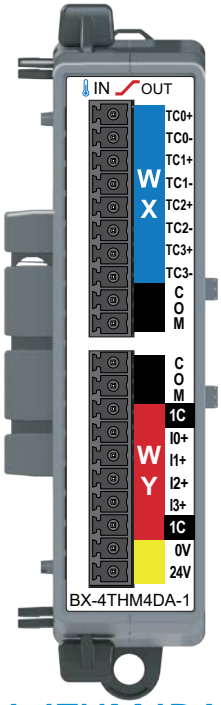

BX-4THM4DA-1

Combination Analog Module
Input: 4-pt Thermocouple
Output: 4-pt, 0–20mA/4–20mA Current Sourcing

BX-RTB10 Terminal Blocks Included.
The BX-RTB10-1 or BX-RTB10-2
(purchased separately) can also be used.

NOTE: This device does not support ***ZIP***Link Wiring Systems

IMPORTANT!

Hot-Swapping Information

Note: This device cannot be Hot Swapped.

Thermocouple Input Specifications		
Input Channels	4 Differential	
Commons	NA	
Resolution	16-bit, 0.1°(C or F) See Data Range Specifications table	
Thermocouple Input Ranges	Type J: −190° to 760°C (−310° to 1400°F) (default) Type E: −210° to 1000°C (−346° to 1832°F) Type K: −150° to 1372°C (−238° to 2502°F) Type R: 65° to 1768°C (149° to 3214°F) Type S: 65° to 1768°C (149° to 3214°F) Type T: −230° to 400°C (−382° to 752°F) Type B: 529° to 1820°C (984° to 3308°F) Type N: −70° to 1300°C (−94° to 2372°F) Type C: 65° to 2320°C (149° to 4208°F)	
Cold Junction Compensation	Automatic	
Thermocouple Linearization	Automatic	
Accuracy vs. Temperature	±50PPM per °C (maximum)	
Maximum Inaccuracy–Temperature	±3°C maximum (excluding thermocouple error) (including temperature drift)	
Linear Voltage Input Ranges	0–39mV 0–156mV 0–1.25 V	±39mV ±156mV ±78mV
Maximum Inaccuracy–Voltage	0.06% @ 25°C, 0.10% @ 0–60°C	
All Channel Update Rate	1.6 s	
Sample Duration Time	270ms	
Open Circuit Detection Time	Within 2–10s	
Maximum Ratings	Fault protected inputs to ±50V	
Common Mode Range	0.6 V (@ 16-bit Resolution)	
Common Mode Rejection	100dB @ DC and 130dB @ 60Hz	
Conversion Method	Sigma-Delta	

Analog Current Sourcing Output Specifications	
Outputs per Module	4
Commons	1
Module Signal Output Range	0–20mA, 4–20mA (Default)
Signal Resolution	16-bit, 15-bit (Default)
Resolution Value of LSB	See Data Range Specifications table
Output Type	Current Sourcing up to 20mA
Output Value in Fault Mode	0mA in 0–20mA mode, 4mA in 4–20mA mode
Maximum Load Impedance	700Ω
Maximum Capacitive Load	1000pF
Allowed Load Type	Grounded
Maximum Continuous Overload	30mA
All Channel Update Rate	2.5 ms per enabled channel
Maximum Inaccuracy	±0.1% of range
Maximum Full Scale Calibration Error	±0.08% of range
Maximum Offset Calibration Error	±0.08% of range
Conversion Method	Successive Approximation
Accuracy vs. Temperature	±25PPM / °C maximum
Maximum Crosstalk	+10µV
Linearity Error (end to end)	±0.08% of range
Output Stability and Repeatability	±0.03% of full range after 10 min. warmup (typical)
Output Ripple	±0.03% of range/mA
Output Settling Time	320µs
Channel to Backplane Isolation	1800VAC applied for one second
Channel to Channel Isolation	None
Loop Fusing (External)	Fast-acting 0.032A recommended

BX-4THM4DA-1 Thermocouple In/Current Out

Module General Specifications	
Weight	110g (3.9 oz)
Heat Dissipation	3.75 W Max
Backplane Power Consumption	0.3 W
External DC Power Required	Class 2 or LPS power supply 24VDC (±20%) 125mA
Software Version Required	Do-more! Designer version 2.6 or later

Data Range Specifications								
Selection	***Description***	***Enable 16-bit: Unchecked (Default)[1] (15-bit Resolution)***			***Enable 16-bit: Checked (16-bit Resolution)***			
		Raw Counts	***Casting[2]***	***µV Per Count***	***Raw Counts[3]***		***Casting[2]***	***µV Per Count***
Type J	Type J	-	-		°C: °F:	−1900 to 7600 −3100 to 14000	-	-
Type K	Type K	-	-		°C: °F:	−2100 to 10000 −3460 to 18320	-	-
Type E	Type E	-	-		°C: °F:	−1500 to 13720 −2380 to 25020	-	-
Type R	Type R	-	-		°C: °F:	650 to 17680 1490 to 32140	-	-
Type S	Type S	-	-		°C: °F:	650 to 17680 1490 to 32140	-	-
Type T	Type T	-	-		°C: °F:	−2300 to 4000 −380 to 7520	-	-
Type B	Type B	-	-		°C: °F:	5290 to 18200 9840 to 33080	- WXn:U	-
Type N	Type N	-	-		°C: °F:	−700 to 13000 −940 to 23720	-	-
Type C	Type C	-	-		°C: °F:	650 to 23200 1490 to 42080	- WXn:U	-
0–39 mVDC	Unipolar 39 mVDC	0–32767	-	1.2	0–65535		WXn:U	0.6
± 39 mVDC	Bipolar 39 mVDC	-	-		−32768 to 32767		-	1.2
± 78 mVDC	Bipolar 78 mVDC	-	-		−32768 to 32767		-	2.4
0–156 mVDC	Unipolar 156 mVDC	0–32767	-	4.8	0–65535		WXn:U	2.4
± 156 mVDC	Bipolar 156 mVDC	-	-		−32768 to 32767		-	4.8
0–1.25 VDC	Unipolar 1.25 VDC	0–32767	-	38.1	0–65535		WXn:U	19.1

1. **Thermocouple and bipolar ranges default to 16-bit resolution.**
2. **For more information on Casting, refer to Help topic DMD0309 in the Do-more! Designer Software.**
3. **Temperatures have one implied decimal place (e.g., raw count of -1900 is -190.0°).**

BX-4THM4DA-1 Thermocouple In/Current Out

Thermocouple Input Circuits

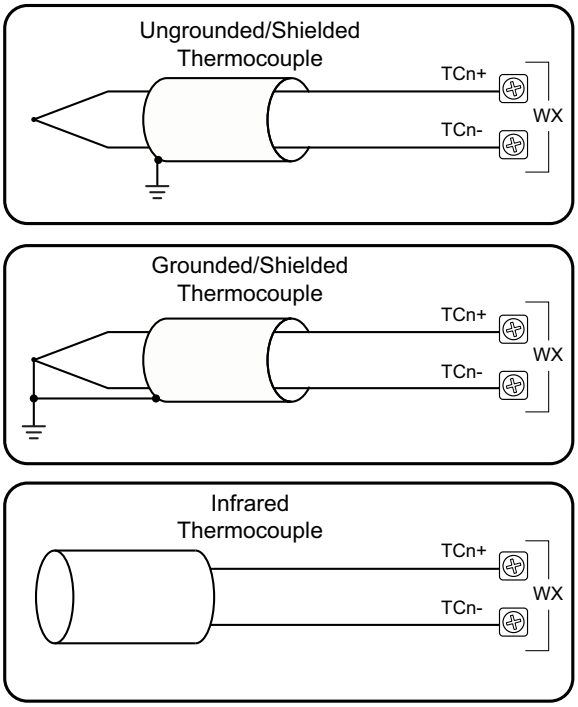

NOTE: Thermocouple extension wire and proper thermocouple terminal blocks must be used to extend thermocouples. AutomationDirect thermocouple wire is recommended.

Analog Voltage Input Circuits

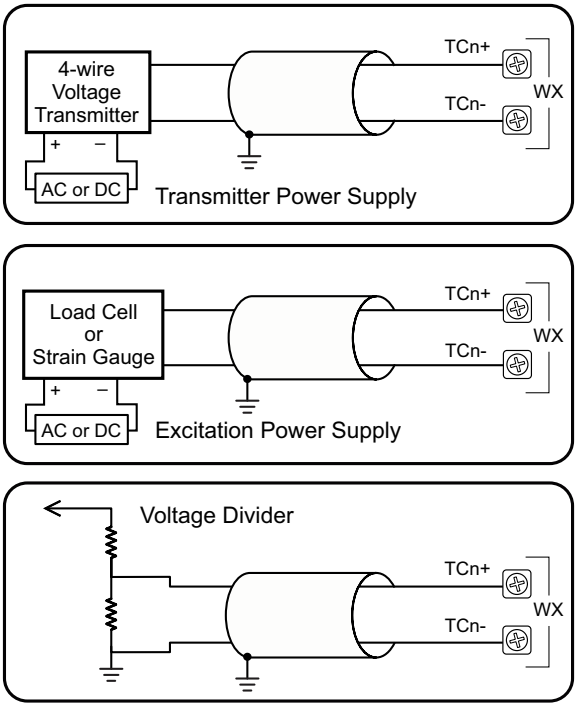

NOTE: Shield should be connected only at one end, to ground at the source device.

For maximum accuracy, jumper unused inputs.

Analog Thermocouple/Voltage Input and Current Output Wiring

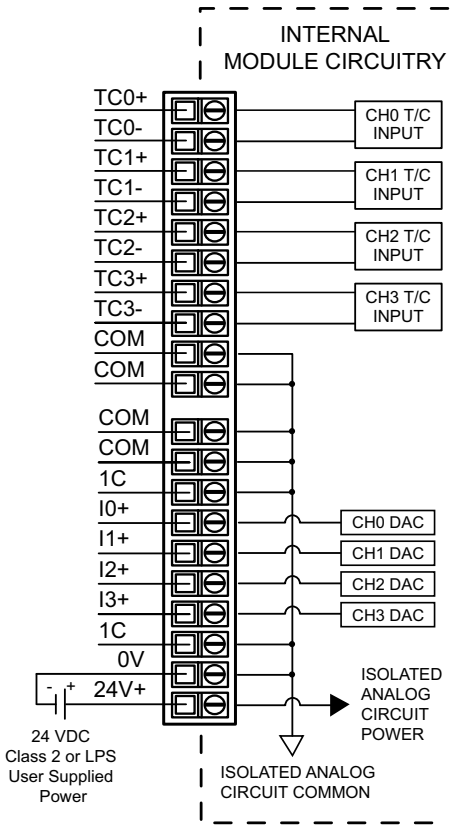

Analog Current Source Output Circuit

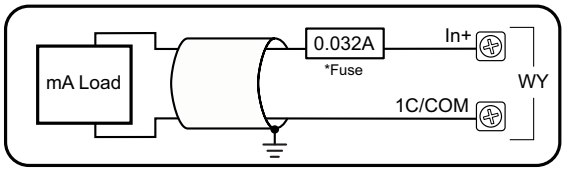

*An Edison S500-32-R 0.032A fast-acting fuse is recommended for all analog voltage inputs, analog outputs, and current loops.

NOTE: Shield should be connected only at one end, to ground at the source device.

NOTE: With grounded thermocouples, take precautions to prevent having a voltage potential between thermocouple tips. A voltage of 1.25 V or greater between tips will skew measurements.

BRX Analog Expansion Modules

Overview

One of the unique features of the BRX platform is its ability to expand its capability to fit your application solution. One of the ways the BRX platform can do this is by using expansion modules that conveniently "snap-on" to the side of any BRX MPU. Once the expansion module has been snapped in place and is added to the project, it instantly adds I/O to the MPU with little to no additional setup required.

The analog expansion modules give you the ability to add analog I/O as needed and are identified as an analog input module, temperature input module, or analog output module. On the front panel of the analog I/O expansion modules, a color scheme and a symbol are used to denote the module type.

Analog modules are available with current inputs or outputs, unipolar/bipolar voltage inputs or outputs, thermocouple inputs, RTD inputs and thermistor inputs. Input/output combination modules are also available.

With the exception of temperature input modules, the modules ship without wiring terminals. This allows you to select the termination style that best fits your application. Several wiring options are available, including screw terminal connectors, spring clamp terminal connectors and pre-wired ***ZIP***Link cable solutions.

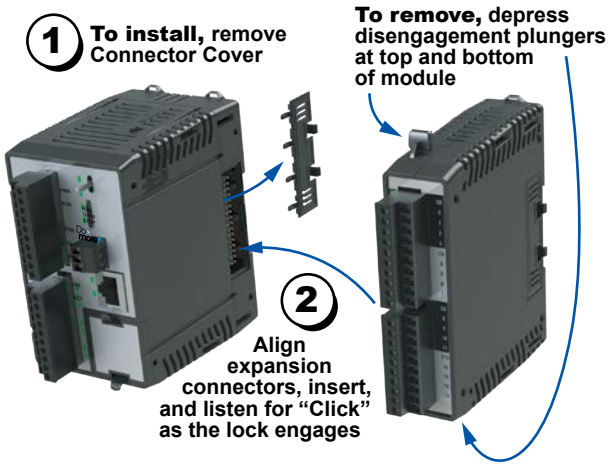

Hot-Swapping Information
Note: This device cannot be Hot Swapped.

General Specifications

All BRX analog input and output modules and temperature input modules have the same general specifications listed in the table below.

General Specifications	
Storage Temperature	−20° to 70°C (−4° to 158°F)
Humidity	5% to 95% (non-condensing)
Environmental Air	No corrosive gases permitted
Vibration	IEC60068-2–6 (Test Fc)
Shock	IEC60068-2-27 (Test Ea)
Enclosure Type	Open Equipment
Noise Immunity	NEMA ICS3-304
EU Directive	See the "EU Directive" topic in the BRX Help File
Agency Approvals (unless otherwise noted on individual module specifications)	UL 61010-1 and UL 61010-2-201 File E139594, Canada and USA CE (EN 61131-2 EMC, EN 61010-1 and EN 61010-2-201 Safety)

Operating Temperature Range		
Operating Temperature	0° to 45°C (32° to 113°F)	0° to 60°C (32° to 140°F)
Module	***Module Revision****	
BX-08AD-1	Rev A (Prior to May 2018)	Rev B (After May 2018)
BX-08AD-2B		
BX-04THM		
BX-08DA-1		
BX-08DA-2B	Rev B (Prior to May 2018)	Rev C (After May 2018)
All other Analog and Temperature Expansion Module part numbers	N/A	Rev A (After May 2018)

*** Module Revision can be found in the last letter (last or second-to-last character) of the module serial number.**

Dimensions

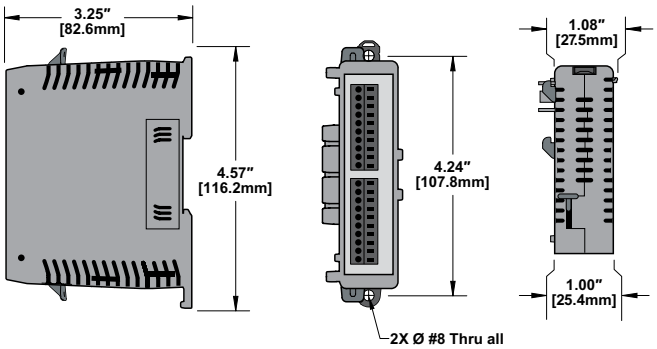

NOTE: When removing an expansion module, make sure there is room for the module to slide away from the system. Failure to do so will result in difficulty removing the module.

BRX Analog Expansion Modules

Analog Input Modules

Nine (9) analog input modules are available, with current or voltage inputs. Analog input module faceplates have a blue terminal bar to distinguish them as inputs, with symbols ⟋ or ◢ to signify current or voltage, respectively.

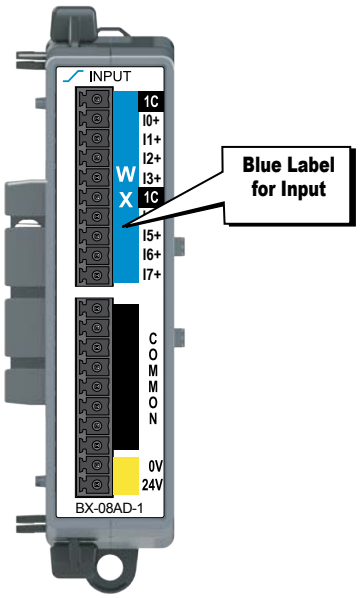

Analog Input Modules				
Part Number	***Points***	***Input Type***	***Resolution***	***Price***
BX-04ADM-1	4	Current Sink 0–20 mA, 4–20 mA	14-bit	
BX-04AD-1	4	Current Sink 0–20 mA, 4–20 mA	16-bit	
BX-08AD-1	8			
BX-16AD-1	16			
BX-04AD-2B	4	Voltage ± 10VDC, ± 5VDC, 0–5 VDC, 0–10 VDC	16-bit	
BX-08AD-2B	8			
BX-16AD-2B	16			
BX-04AD-3	4	Current Sink 0–20mA, 4–20mA Voltage ±10VDC, ±5VDC, 0–5VDC, 0–10VDC	16-bit	
BX-08AD-3	8			

Temperature Input Module

Six (6) temperature input modules are available, with thermocouple, RTD, and/or thermistor inputs. The thermocouple input modules can also be configured for millivolt-level voltage inputs, and the RTD input module can also be configured for resistance input. Temperature module faceplates have a blue terminal bar to distinguish them as inputs, and 🌡 symbol to signify temperature.

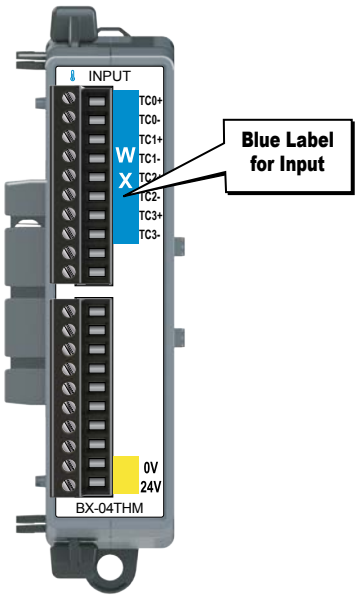

Temperature Input Modules			
Part Number	***Points***	***Input Type***	***Price***
BX-04THM	4	Thermocouple	
BX-08THM	8	Thermocouple	
BX-06RTD	6	RTD	
BX-08NTC	8	Thermistor	
BX-04UT	4	Universal Temperature (Thermocouple, RTD, Thermistor supported)	
BX-08UT	6	Universal Temperature (Thermocouple, RTD, Thermistor supported)	

BRX Analog Expansion Modules

Temperature/Analog Combo Module

Three (3) combination modules are available, with thermocouple, RTD or universal temperature inputs and current sourcing outputs. The thermocouple input modules can also be configured for millivolt-level voltage inputs, and the RTD input module can also be configured for resistance input. The Input/Output faceplate terminal bar is in blue and red, making it easy to distinguish between inputs and outputs, and the 🌡 and ⎍ symbols signify temperature and current, respectively.

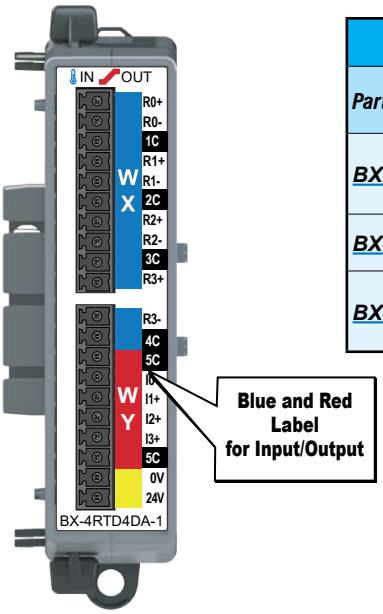

Temperature Input / Analog Output Combo Modules					
Part Number	***Points***		***Input Type***	***Output Type***	***Price***
	Input	***Output***			
BX-4RTD4DA-1	4	4	Resistance Temperature Detector (RTD)	Current Source 0–20mA, 4–20mA	
BX-4THM4DA-1	4	4	Thermocouple	Current Source 0–20mA, 4–20mA	
BX-4UT4DA-3	4	4	Universal Temperature	Current Source: 0–20mA, 4–20mA Voltage:±10VDC, ±5VDC, 0–5VDC, 0–10VDC	

Temperature/Discrete Combo Module

Three (3) combination modules are available with universal temperature inputs and DC sinking, sourcing or relay outputs. The thermocouple inputs can also be configured for millivolt-level voltage inputs, and the RTD inputs can also be configured for resistance input. The Input/Output faceplate terminal bar is in blue and red, making it easy to distinguish between inputs and outputs, and the 🌡 and ⎍ symbols signify temperature and discrete signals, respectively.

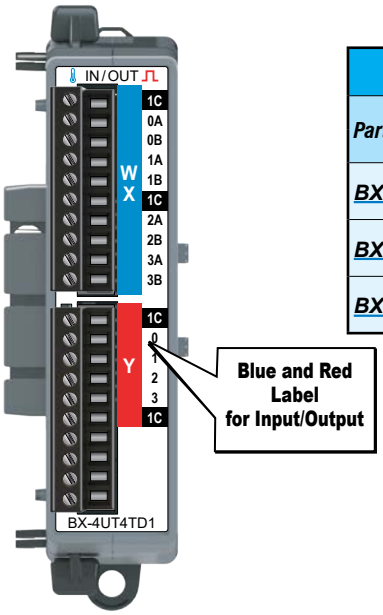

Temperature Input / Discrete Output Combo Modules					
Part Number	***Points***		***Input Type***	***Output Type***	***Price***
	Input	***Output***			
BX-4UT4TD1	4	4	Universal Temperature	12–24 VDC Sinking	
BX-4UT4TD2	4	4		12–24 VDC Sourcing	
BX-4UT4TR	4	4		Relay Form A (SPST)	

BRX Analog Expansion Modules

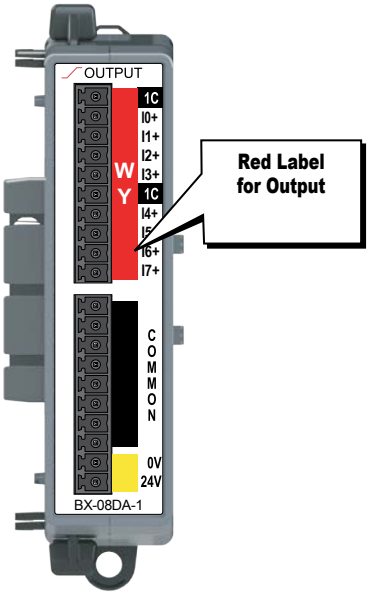

Analog Output Modules

Six (6) analog output modules are available, in current and voltage outputs. Analog output module faceplates have a red terminal bar to distinguish them as outputs, with symbols ⎍ or ◢ to signify current or voltage, respectively.

Analog Output Modules			
Part Number	***Points***	***Output Type***	***Price***
BX-04DA-1	4	Current Source 0–20 mA, 4–20 mA	
BX-08DA-1	8		
BX-04DA-2B	4	Voltage ± 10VDC, ± 5VDC, 0–5 VDC, 0–10 VDC	
BX-08DA-2B	8		
BX-04DA-3	4	Current Source 0–20mA, 4–20mA Voltage ±10VDC, ±5VDC, 0–5VDC, 0–10VDC	
BX-08DA-3	8		

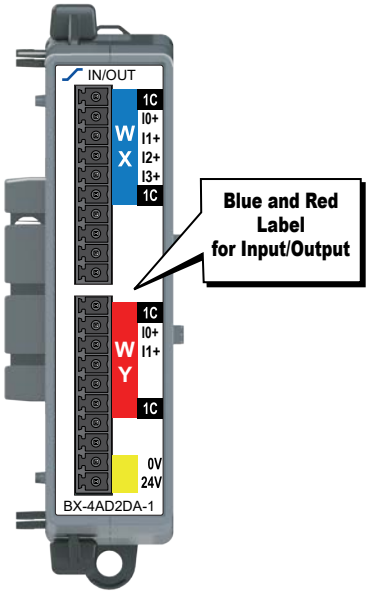

Analog Combo Input / Output Modules

Six (6) analog input/output combo modules are available with current or voltage inputs and outputs. The Input/Output faceplate terminal bar is in blue and red, making it easy to distinguish between inputs and outputs. Symbols ⎍ and ◢ signify current and voltage, respectively.

Analog Combo Input / Output Modules					
Part Number	***Points***		***Input Type***	***Output Type***	***Price***
	Input	***Output***			
BX-2AD2DA-1	2	2	Current Sink 0–20mA, 4–20mA	Current Source 0–20mA, 4–20mA	
BX-4AD2DA-1	4	2			
BX-2AD2DA-2B	2	2	Voltage ±10VDC, ±5VDC, 0–5VDC, 0–10VDC	Voltage ±10VDC, ±5VDC, 0–5VDC, 0–10VDC	
BX-4AD2DA-2B	4	2			
BX-2AD2DA-3	2	2	Current Source 0–20mA, 4–20mA Voltage ±10VDC, ±5VDC, 0–5VDC, 0–10VDC	Current Source 0–20mA, 4–20mA Voltage ±10VDC, ±5VDC, 0–5VDC, 0–10VDC	
BX-4AD4DA-3	4	4			

Expansion Module Support by Controller	
Controller Type	***# Expansion Modules***
BX-DM1E-M	8
BX-DM1-10	2
BX-DM1E-10	2
BX-DM1-18	4
BX-DM1E-18	8
BX-DM1-36	4
BX-DM1E-36	8
BX-DMIO*	8
BX-EBC100*	8
BX-MBIO*	8

*** Remote I/O controllers do not support Motion Control and Communications Modules.**

BRX Wiring Termination Options

Terminal Block Connectors

The terminal block connectors are provided in kits of multiple connectors that are ordered as a single part number. There are 2 different types of kits to choose from; one kit for the five (5), eight (8) and 12-point discrete, and one kit for the analog modules and 16-point discrete modules. The five (5), eight (8) and 12-point discrete module kits each have (3) 5-pin 5mm connectors. The 8-point modules will use only 2 of the 5-pin connectors.

The five (5) and 12-point modules will use all three connectors. The analog and 16-point digital module kits include (2) 10-pin 3.81 mm connectors.

Terminal Block Connectors, 5, 8 and 12-Point Discrete Modules

Terminal Block Kits for 5-point, 8-point and 12-point Expansion Modules

BX-RTB08 (Kit - 3 pieces)

BX-RTB08-1 (Kit - 3 pieces)

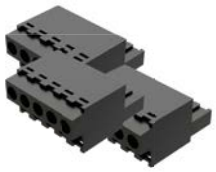

BX-RTB08-2 (Kit - 3 pieces)

Terminal Block Specifications 5-, 8- & 12-Point Type			
Part Number ***Single Block*** ***Set of 3 Blocks***	***BX-RTB05*** ***BX-RTB08***	***BX-RTB05-1*** ***BX-RTB08-1***	***BX-RTB05-2*** ***BX-RTB08-2***
Price (Single Block)			
Price (Kit)			
Connector Type	Screw Type - 90-degree	Spring Clamp Type - 180-degree	Screw Type - 180-degree
Wire Exit	180-degree	180-degree	180-degree
Pitch	5.0 mm	5.0 mm	5.0 mm
Screw Size	M2.5	N/A	M2.5
Screw Torque Recommended	< 3.98 lb·in (0.45 N·m)	N/A	< 3.98 lb·in (0.45 N·m)
Screwdriver Blade Width	3.5 mm	3.5 mm	3.5 mm
Wire Gauge (Single Wire)	28–12 AWG	28–14 AWG	28–12 AWG
Wire Gauge (Dual Wire)	28–16 AWG	28–16 AWG (Dual Wire Ferrule Required)	28–16 AWG
Wire Strip Length	0.3 in (7.5 mm)	0.37 in (9.5 mm)	0.3 in (7.5 mm)
Equiv. Dinkle P/N	5ESDV-05P-BK	5ESDSR-05P-BK	5ESDF-05P-BK

Terminal Block Connectors, Analog Modules and 16-Point Discrete Modules

Terminal Block Kits for Analog and 16-point Discrete Expansion Modules

BX-RTB10 (Kit - 2 pieces)

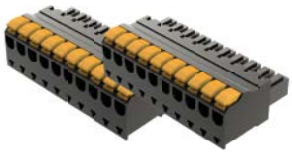

BX-RTB10-1 (Kit - 2 pieces)

BX-RTB10-2 (Kit - 2 pieces)

Terminal Block Specifications 16-Point Type			
Part Number	***BX-RTB10***	***BX-RTB10-1***	***BX-RTB10-2***
Price (Kit)			
Connector Type	Screw Type 90-degree	Spring Clamp Type 180-degree	Screw Type 180-degree
Wire Exit	180-degree	180-degree	180-degree
Pitch	3.81 mm	3.81 mm	3.81 mm
Screw Size	M2	N/A	M2
Screw Torque Recommended	<1.77 lb·in (0.2 N·m)	N/A	<1.77 lb·in (0.2 N·m)
Screwdriver Blade Width	2.5 mm	2.5 mm	2.5 mm
Wire Gauge (Single Wire)	28–16 AWG	26–18 AWG	30–16 AWG
Wire Gauge (Dual Wire)	28–18 AWG	30–20 AWG (Dual Wire Ferrule Required)	30–18 AWG
Wire Strip Length	0.24 in (6mm)	0.35 in (9mm)	0.26 in (6.5 mm)
Equiv. Dinkle P/N	EC381V-10P-BK	ESC381V-10-BK	EC381F-10P-BK

NOTE: BX-RTB10 terminal blocks are included with Temperature Input modules.