CLICK PLUS Option Slot Module Specifications

C2-08DR-6V

4 DC Input / 4 Relay Output
4 Analog Voltage Input
2 Analog Voltage Output
Option Slot I/O Module

NOTE: Use this module and a CLICK PLUS CPU as a comparable replacement for the existing C0-12DRE-2-D PLC.

Wiring Diagram

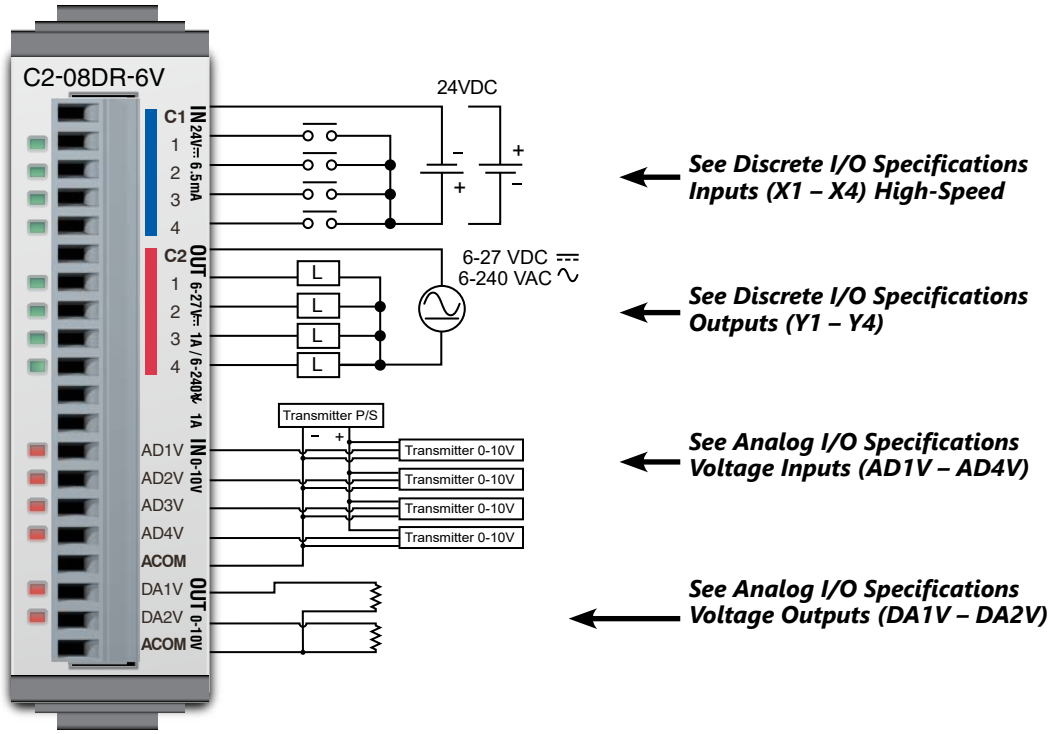

NOTE: There are no ***ZIP***Link pre-wired PLC connection cables and modules for the Analog Option Slot Modules (cannot mix discrete I/O and analog I/O signals in a ***ZIP***Link cable).

General Specifications	
Current Consumption at 24VDC	80mA max (All Points On)
Terminal Block Replacement Part No.	C0-16TB
Drawing Link	PDF
Weight	57g

CLICK PLUS Option Slot Module Specifications

C2-08DR-6V (cont'd)

X1 - X4 (High-Speed)

Discrete I/O Specifications - Inputs	
Inputs per Module	4 (Sink/Source)
Operating Voltage Range	24VDC
Input Voltage Range	21.6–26.4 VDC
Input Current	Typ 6.5 mA @ 24VDC
Maximum Input Current	7mA @ 26.4 VDC
Input Impedance	3.9 kΩ @ 24VDC
Input Frequency (Max)	X1-X4: 100kHz (3m cable)
ON Voltage Level	> 19VDC
OFF Voltage Level	< 2VDC
Minimum ON Current	4.5 mA
Maximum OFF Current	0.5 mA
OFF to ON Response	Typ 3µs, Max 5µs
ON to OFF Response	Typ 1µs, Max 3µs
Status Indicators	Logic Side (4 points, green LED)
Commons	1 (4 points/common)

Maximum Number of High Speed Counters	
Up	4
Down	4
Up/Down	2
Pulse/Direction	2
Quadrature A-B	2
Quadrature A-B+Z	1

Equivalent Discrete Input Circuit

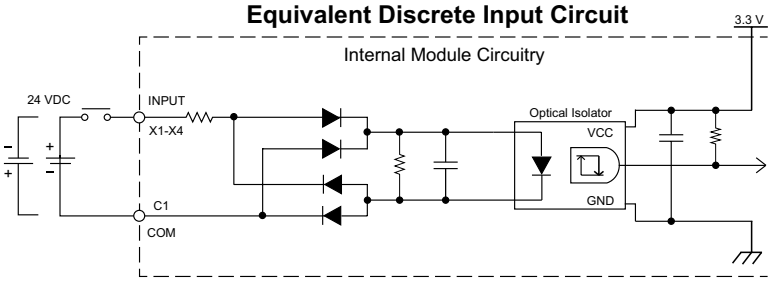

C2-08DR-6V Temperature Derating Chart

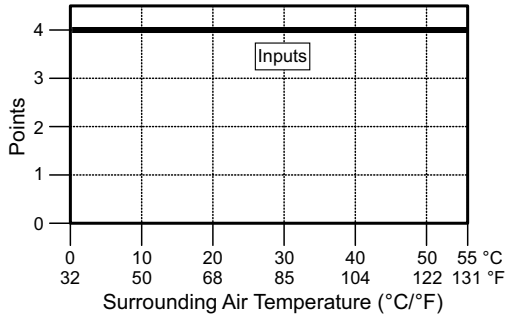

Y1 - Y4

Discrete I/O Specifications - Outputs	
Outputs per Module	4
Operating Voltage Range	6–27 VDC / 6–240 VAC
Output Type	Relay, form A (SPST)
AC Frequency	47–63 Hz
Maximum Current	1A/point (resistive)
Minimum Load Current	5mA @ 5VDC
Maximum Inrush Current	3A for 10ms
OFF to ON Response	< 15ms
ON to OFF Response	< 15ms
Status Indicators	Logic Side (4 points, red LED)
Commons per Module	1 (4 points/ common)

Typical Relay Life (Operations) at Room Temperature	
Voltage & Load Type	***Load Current: 1 A***
30VDC Resistive	200,000 cycles*
30VDC Inductive	100,000 cycles*
250VAC Resistive	200,000 cycles*
250VAC Inductive	50,000 cycles*

*ON to OFF = 1 cycle

Equivalent Discrete Output Circuit

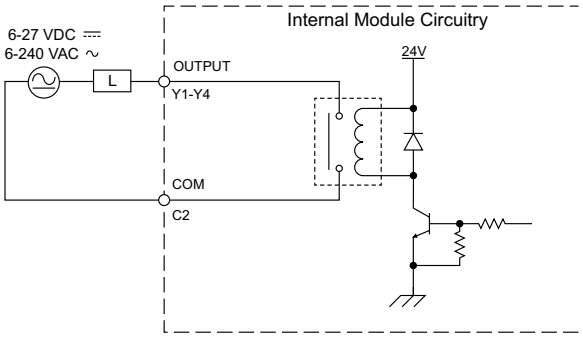

C2-08DR-6V Temperature Derating Chart

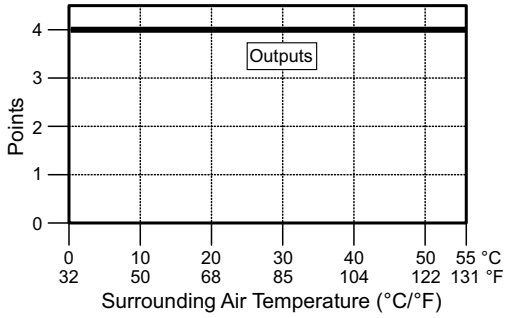

CLICK PLUS Option Slot Module Specifications

C2-08DR-6V (cont'd)

AD1V - AD4V

Analog Specifications - Voltage Input	
Inputs per Module	4 (voltage)
Input Range	0–10 VDC
Resolution	12-bit
Conversion Time	50ms
Input Impedance	40kΩ
Input Stability	±2 LSB maximum
Full-Scale Calibration Error	±2% maximum
Offset Calibration Error	±25mV maximum
Accuracy vs. Temperature Error	±100ppm/°C maximum

Analog Voltage Input Circuit

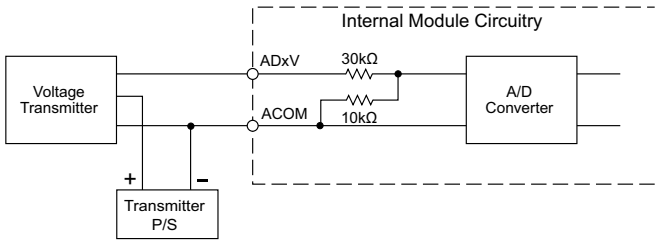

DA1V - DA2V

Analog Specifications - Voltage Output	
Outputs per Module	2 (voltage)
Output Range	0–10 VDC
Resolution	12-bit
Conversion Time	1ms
Load Impedance	4kΩ minimum (output current 2.5 mA maximum)
Full-Scale Calibration Error	±2% maximum
Offset Calibration Error	±25mV maximum
Accuracy vs. Temperature Error	±100ppm/°C maximum

Analog Voltage Output Circuit

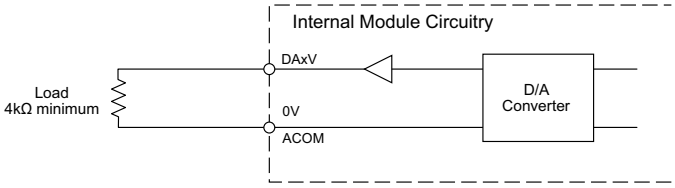

Insulation Requirements for IEC/UL 61010-1 and 61010-2-201 (sections 6.5 and 6.7)

Input to Output Insulation

Basic insulation is provided between the Relay Output and the closest Input terminal. When connecting the Relay Output to a circuit that exceeds 100VAC (141VDC) more than the closest input circuit an additional basic insulation layer must be added to the input circuit.

Additional Basic Insulation Examples

- Supplementary Insulation: Interposing relay, additional insulating material,... (sec. 6.5.3)
- Automatic Disconnection of the Supply: Properly sized breaker (sec. 6.5.5)
- Current or Voltage Limiting device: Properly sized fuse (sec. 6.5.6)

Basic insulation requires a clearance distance of 1.5 mm or more, a creepage distance of 2.5 mm or more, and dielectric voltage withstand of 1500Vrms.

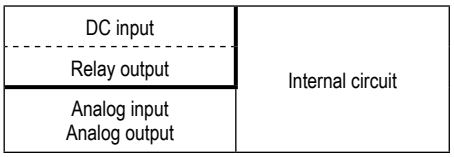

——— : No insulation
- - - - : Basic insulation
━━━ : Reinforced insulation

CLICK PLUS Option Slot Module Specifications

General Specifications For All CLICK PLUS Option Slot Modules

These general specifications apply to all CLICK PLUS Option Slot Modules. Please refer to the appropriate I/O temperature derating charts under the Option Slot module and Stackable I/O module specifications to determine the best operating conditions based on the ambient temperature of your particular application.

Option Slot Module General Specifications	
Operating Temperature	32°F to 131°F [0°C to 55°C]
Storage Temperature	−4°F to 158°F [−20°C to 70°C] IEC 60068-2-1 (Test Ab, Cold) IEC 60068-2-2 (Test Bb, Dry Heat) IEC 60068-2-14 (Test Na, Thermal Shock)
Ambient Humidity	30% to 95% relative humidity (non-condensing)
Environmental Air	No corrosive gases. Environmental pollution level is 2 (UL840)
Environment	For Indoor Use Only
Vibration	IEC60068-2-6 (Test Fc) 5–9Hz:3.5mm amplitude, 9–150Hz 1.0G 10 sweep cycles per axis on each of 3 mutually perpendicular axes.
Shock	IEC60068-2-27 (Test Ea) 15G peak, 11ms duration, 3 shocks in each direction per axis, on 3 mutually perpendicular axes.
Noise Immunity	<EN61131-2> EN61000-4-2 (ESD) EN61000-4-3 (RFI) EN61000-4-4 (FTB) EN61000-4-6 (Conducted) EN61000-4-8 (Power frequency magnetic field immunity) <Local Test> Impulse Immunity : 1000V @ 1uS pulse
Emissions	EN55011 Class A (Radiated RF emission)
Agency Approvals	UL61010 (File No. E157382, E316037); CE (EN61131-2); CUL Canadian C22.2
Other	RoHS 2011/65/EU Amendment (EU)2015/863

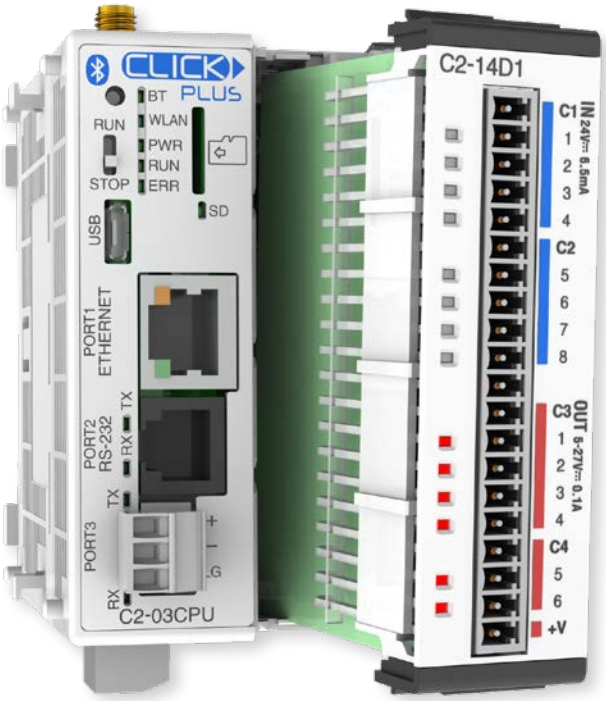

CLICK PLUS PLC Specifications

CLICK PLUS PLC Hardware/Software Compatibility

The table below shows the minimum software and hardware versions required for the CLICK PLUS PLCs and Option Slot Modules. The CLICK PLUS PLC can also utilize the CLICK Stackable I/O Modules, as any software and hardware version compatible with CLICK PLUS is also compatible with the CLICK Stackable I/O Modules.

CLICK PLUS PLC Features Software Compatibility

		Minimum CLICK Software Version				
Device Type	***Part Number***	***Hardware***	***High-Speed Inputs****	***High-Speed Outputs****	***EtherNet/IP***	***PID, DHCP, DNS, SNTP, MQTT***
CLICK PLUS CPU	C2-01CPU	v3.00	v3.00	v3.30	v3.00	v3.00
	C2-02CPU				N/A	
	C2-03CPU				v3.00	
	C2-01CPU-2	v3.20	v3.20		v3.20	v3.20
	C2-02CPU-2				N/A	
	C2-03CPU-2				v3.20	
Option Slot I/O Modules	C2-14D1	v3.00	v3.00	v3.30	N/A	N/A
	C2-14D2					
	C2-14DR			N/A		
	C2-14AR		N/A			
	C2-08D1-4VC	v3.00	v3.00	v3.30	N/A	N/A
	C2-08D2-4VC					
	C2-08DR-4VC			N/A		
	C2-08AR-4VC		N/A			
	C2-08D1-6C	v3.00	v3.00	v3.30	N/A	N/A
	C2-08D2-6C					
	C2-08DR-6C			N/A		
	C2-08AR-6C		N/A			
	C2-08D1-6V	v3.00	v3.00	v3.30	N/A	N/A
	C2-08D2-6V					
	C2-08DR-6V			N/A		
	C2-08AR-6V		N/A			
Option Slot Intelligent Modules	C2-DCM	v3.20	N/A	N/A	N/A	N/A

*** High-speed Inputs and Outputs are only available when the Option Slot I/O Module is installed in Slot 0.**

Accessories

C2-USER-M
CLICK PLUS PLC Hardware User Manual

Manual covers all CLICK PLUS PLC and I/O module installation and wiring, specifications, error codes and troubleshooting guide. The CLICK PLUS PLC Hardware User Manual can be downloaded free at the AutomationDirect Web site;

C0-USER-M
CLICK PLC Hardware User Manual

Manual covers all CLICK PLC and I/O module installation and wiring, specifications, error codes and troubleshooting guide. The CLICK PLC Hardware User Manual can be downloaded free at the AutomationDirect Web site;

C0-PGMSW
Programming Software USB

The programming software can be downloaded free at the AutomationDirect Web site, or the USB can be purchased from the AutomationDirect online Web store.

EA-MG-PGM-CBL
PC to Panel Programming Cable Assembly for C-more Micro-Graphic Panels and CLICK/CLICK PLUS PLCs

The 6-ft cable assembly connects a personal computer to any ***C-more*** Micro-Graphic panel, CLICK PLC, or select CLICK PLUS PLC for setup and programming.

Note: This cable assembly uses the PC's USB port and converts the signals to serial transmissions. The USB port supplies 5VDC to the Micro-Graphic panel for configuration operations.

Assembly includes standard USB A-type connector to B-type connector cable, custom converter, and an RS232C cable with an RJ12 modular connector on each end.

USB-CBL-AMICB6
USB A to USB microB Programming Cable Assembly (CLICK PLUS Only)

Programming cable, USB A to USB microB, 6ft (1.83 m) length. For use with CLICK PLUS PLCs and most USB devices. The USB port supplies 5VDC to the CLICK PLUS CPU for programming.

D2-DSCBL
Programming Cable for CLICK/CLICK PLUS and DirectLOGIC PLCs

12ft. (3.66 m) RS232 shielded PC programming cable for CLICK, select CLICK PLUS PLCs, DL05, DL06, DL105, DL205, D3-350, D4-450, D4-454, and Do-more H2 and T1H series CPUs. 9-pin D-shell female connector to an RJ12 6P6C connector.

Note: If your PC has a USB port but does not have a serial port, you must use programming cable EA-MG-PGM-CBL to connect to CLICK PLCs. For CLICK PLUS PLCs, you may also use USB-CBL-AMICB6

C0-3TB
Spare 3-Pole Terminal Block

Replacement 3-pole terminal block for the 3-wire RS-485 Port 3 on CLICK Standard and Analog PLCs as well as the CLICK PLUS C2-03CPU. Sold in packs of 2.

C0-4TB
Spare 24VDC Power Terminal Block

Replacement terminal block for the 24VDC supply power to the PLC. Sold in packs of 2.

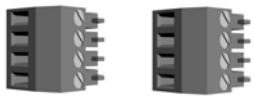

C0-8TB
Spare 8-Point I/O Terminal Block

Replacement terminal block for the 8-point I/O modules. Sold in packs of 2.

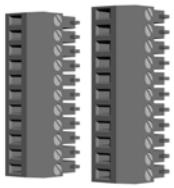

C0-8TB-1
Spare 13-Point I/O Terminal Block

Replacement terminal block for the 8-point I/O relay modules. Sold in packs of 2.

C0-16TB
Spare 16-Point I/O Terminal Block

Replacement terminal block for the 16-point I/O modules and PLC built-in I/O. Sold in packs of 2.

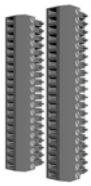

C2-6TB
Spare 6-pt Terminal Block

Replacement terminal block for the C2-DCM serial ports.
Sold in packs of 2.