EATON
Cutler-Hammer

Enhanced 50 Series Through-beam Photoelectric Sensors

1151E-6504

1251E-6504

- Long sensing distances
- Fiberglass-reinforced plastic housing
- Field of view: 2.4°
- Cable wires or mini/micro connector termination
- NPN/PNP, Solid-State Relay, or SPDT EM Relay outputs
- IP67 rated

Note: Cutler-Hammer parts available for sale to North America locations only.

1151E-6517

1251E-6517

Enhanced 50 Series Through-beam Photoelectric Sensors Selection Chart

Part Number	Price	Voltage Range	Sensing Range	Optimum Range	Sensing Beam	Through-Beam Component	Output Type	Connection Type	Cable Part Number
1151E-6517		10 - 40 VDC	500ft [152 m]	0.1 to 250ft [0.03 to 77 m]	Infrared	Source/Emitter	N/A	6-foot cable (300V)	pre-wired 6ft [1.8 m]
1251E-6517						Detector/Receiver	NPN/PNP 250mA		
1151E-6547						Source/Emitter	N/A	4-pin Euro (Micro) DC connector	CSDS4A4CY2202
1251E-6547						Detector/Receiver	NPN/PNP 250mA		CSDS4A4CY2205
1151E-6513		12 - 240 VDC 24 - 240 VAC				Source/Emitter	N/A	6-foot cable (300V)	pre-wired 6ft [1.8 m]
1251E-6513						Detector/Receiver	Solid-state relay 300mA @ 240 VAC/VDC		
1151E-6543						Source/Emitter	N/A	4-pin Micro AC connector	CSAS4F4CY2202
1251E-6543						Detector/Receiver	Solid-state relay 300mA @ 240 VAC/VDC		CSAS4F4CY2205
1151E-6504						Source/Emitter	N/A	4-pin Mini connector	CSMS4A4CY1602
1251E-6503						Detector/Receiver	Solid-state relay 300mA @ 240 VAC/VDC		CSMS4A4CY1606
1251E-6504						Detector/Receiver	SPDT EM relay 3A @ 120VAC	5-pin Mini connector	CSMS5A5CY1602 CSMS5A5CY1606

Note: Purchase one source and one detector for a complete set.

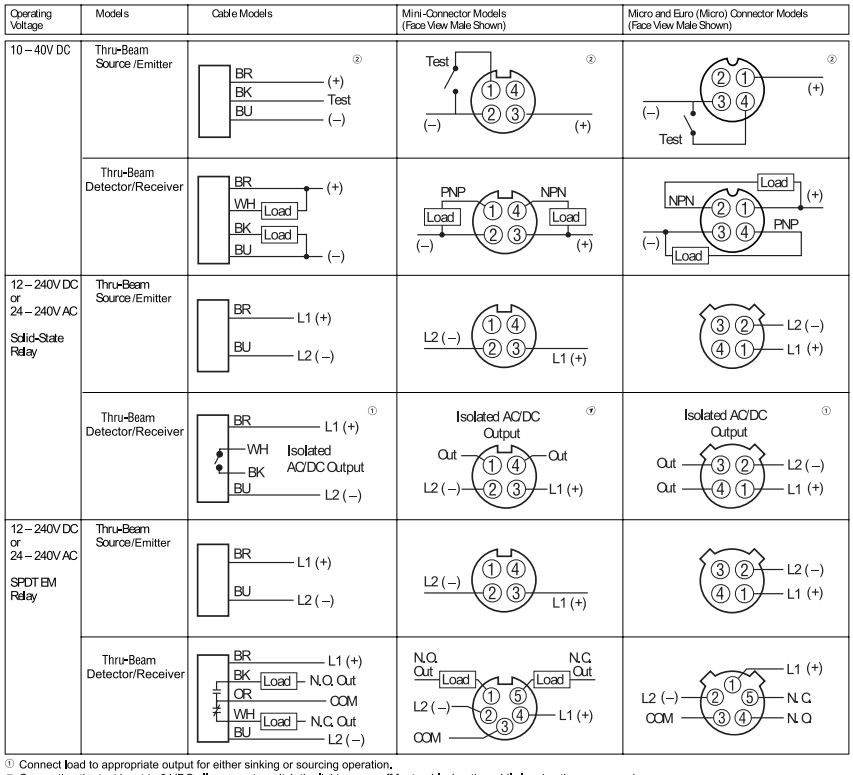

① Connect load to appropriate output for either sinking or sourcing operation.
② Connecting the test input to 0 VDC allows you to switch the light source off for troubleshooting while leaving the sensor under power.

Characteristic curve chart

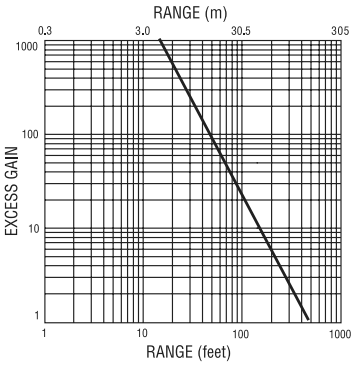

Spot dimension chart

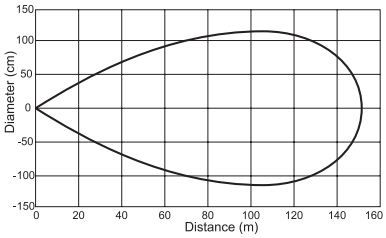

Cutler-Hammer

Enhanced 50 Series Photoelectric Sensors Selection Guide

Overview

The Enhanced 50 family of high performance photoelectric sensors offers outstanding features, flexibility and durability at an incredible price. Choose from a wide selection of Through-beam, Polarized Reflex, Diffuse and even Clear Object models all designed in a rugged, industry standard, rectangular package. Each model comes with a variety of input options for maximum flexibility across many voltage ratings.

Cabling choices include built-in mini-connector, micro-connector, pigtail micro-connector or a 6 ft. integrated cable. Other convenient features included are Dark-on/Light-on selectability and Gain adjustment, available on all models. Use the Selection Guide below to find the sensor model that best suits your requirements.

Enhanced 50 Photoelectric Sensors Specifications by Model Type

Specifications	*Through-Beam*	*Diffuse*	*Polarized Reflex*	*Clear Object Detector*
Voltage Range	10 - 40 VDC 12 - 240 VDC 24 - 240 VAC	10 - 40 VDC 12 - 240 VDC 24 - 240 VAC	10 - 40 VDC 12 - 240 VDC 24 - 240 VAC	10 - 40 VDC 12 - 240 VDC 24 - 240 VAC
Sensing Range	500ft [152m]	10ft [3m]	16ft [4.9 m]	45in [1.2 m]
Optimum Power	0.1 to 250ft [0.03 to 77m]	1 to 60in [25 to 1520mm]	0.5 to 8ft [0.2 to 2.5 m]	1 to 24in [25 to 610mm]
Sensing Beam	Infrared	Infrared	Visible Red	Visible Red
Output Types	NPN/PNP 250mA, Solid-state relay 300mA @ 240 VAC/VDC, SPDT EM relay 3A @ 120VAC	NPN/PNP 250mA, Solid-state relay 300mA @ 240 VAC/VDC, SPDT EM relay 3A @ 120VAC	NPN/PNP 250mA, Solid-state relay 300mA @ 240 VAC/VDC, SPDT EM relay 3A @ 120VAC	NPN/PNP 250mA, Solid-state relay 300mA @ 240 VAC/VDC, SPDT EM relay 3A @ 120VAC

Enhanced 50 Photoelectric Sensors Specifications by Input Type

Specifications	*AC/DC EM Relay Models*	*AC/DC Solid-State Relay Models*	*DC Only Models*
Input Voltage	12 – 240 VDC 24 – 240 VAC	12 – 240 VDC 24 – 240 VAC	10 – 40 VDC
Light/Dark Operation	Switch selectable		
Operating Temperature	-13 to 131°F [-25 to 55°C]		
Humidity	95% relative humidity, non-condensing		
Case Material	Fiberglass reinforced plastic		
Lens Material	Acrylic		
Vibration	IEC 60947-5-2 part 7.4.2		
Shock	IEC 60947-5-2 part 7.4.1		
Protection	Output short circuit and overcurrent protection, reverse polarity protection		
Enclosure Ratings	IP67		
Agency Approvals	IEC IP67, cCSAus, UL508 (CSA File 224447)		
Output Load	3A @ 120VAC 3A @ 28VAC 3A @ 240VAC	300mA @ 240 VAC/VDC	250mA
Response Time	15ms	2ms	
No Load Current Draw	<30 mA		
Leakage Current (max.)	—	1mA @ 240VAC	<10µA
Indicator LEDs	Through-Beam Source.....All Others: Red: Power..... Green: Output ..... Yellow: Power ..... Red: Alignment		

Cutler-Hammer

Enhanced 50 Series Photoelectric Sensors

Application Guide

The Enhanced 50 Series Photoelectric Sensors are a great fit for applications such as material handling, packaging, wrapping and sortation.
This family of sensors, with its four basic models (Through-beam, Polarized Reflex, Diffuse and Clear Object), meets the needs for almost any sensing requirement, including harsh environments with excessive dust or high temperature.
Follow the application guide below to choose the best sensor model for your application.

Through-Beam

- Most accurate
- Longest sensing range
- Most reliable
- Must be installed in two points on system: emitter and receiver
- More costly

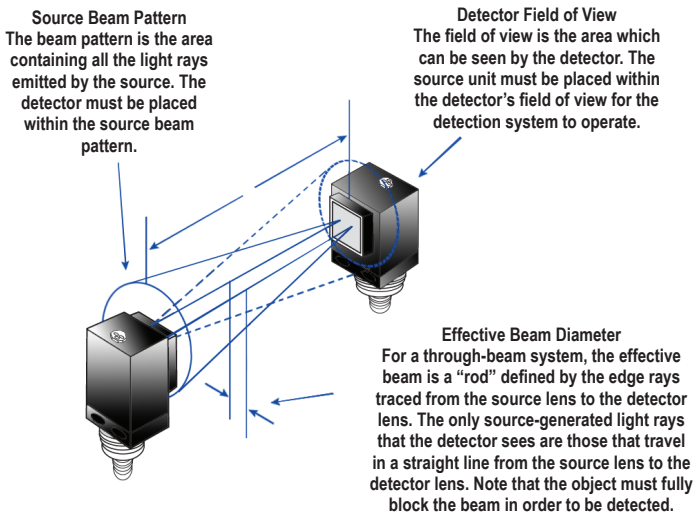

Diffuse

- Lower cost
- Install at one point
- Less accurate than Through-Beam or Polarized Reflex
- More setup time involved

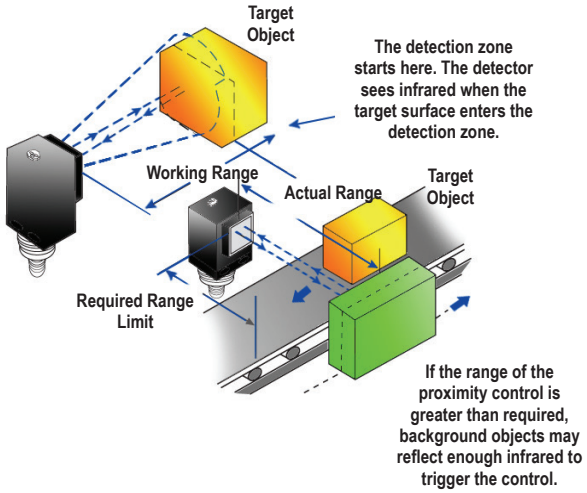

Polarized Reflex

- Lower cost than Through-Beam
- Longer sensing range than Diffuse
- Very reliable
- Must be installed in two points on system: sensor and reflector

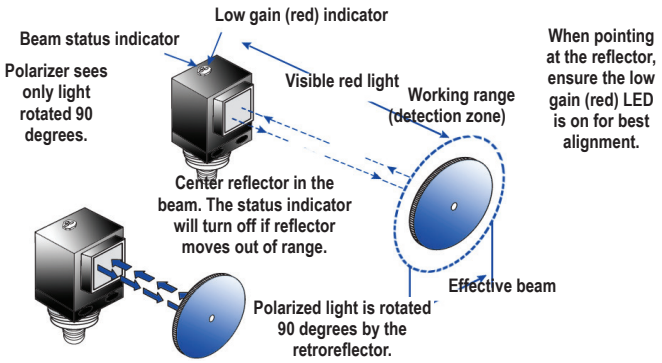

Clear Object Detector

- Most reliable for sensing transparent objects
- Must be installed in two points on system: sensor and reflector.
- Short sensing distance: 45 inches max.

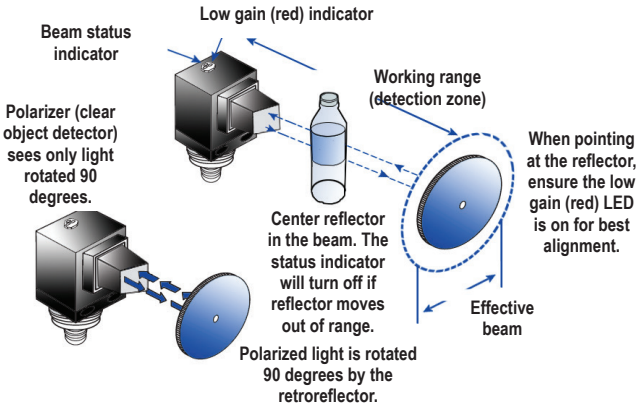

Enhanced 50 Series Photoelectric Sensors Dimensions

Sensor Dimensions

inches (mm)

Cable and Pigtail Connector* Version

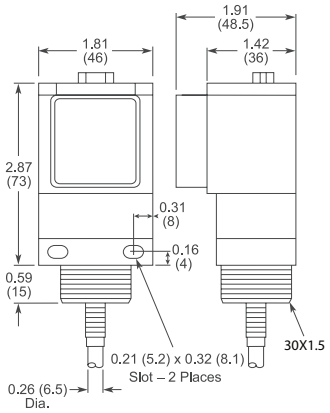

* Pigtail length: 7.5" nominal

AC/DC Micro or Euro (Micro) Connector Versions

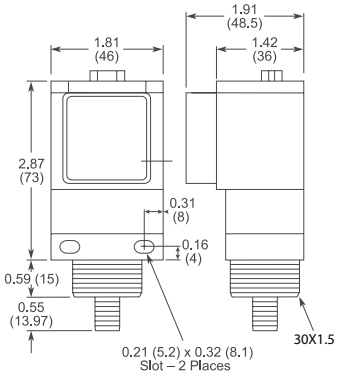

Mini Connector Versions

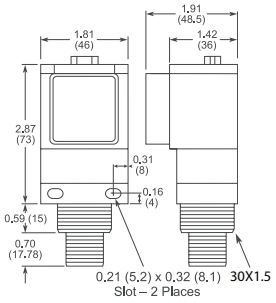

Clear Object Versions (Cable Version Shown)

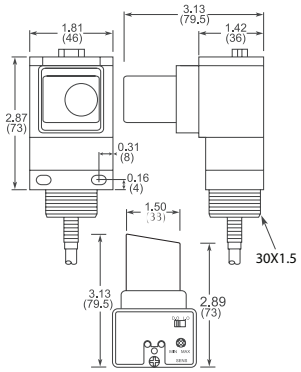

Top View

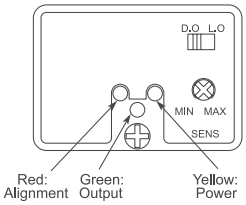

Connector Cables Dimensions

(in/mm)

Micro Style Connector Cables

M12 x 1 (DC) connector cable

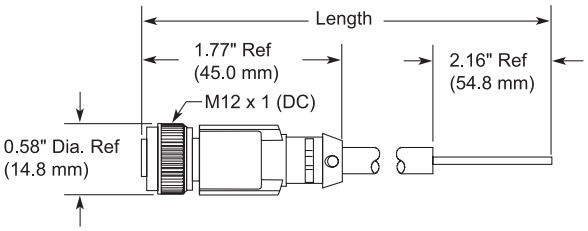

1/2" - 20 UNF-2B (AC) connector cable

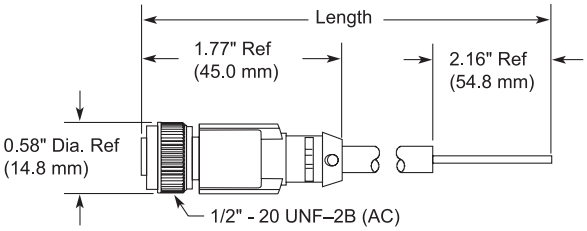

Mini Style Connector Cables

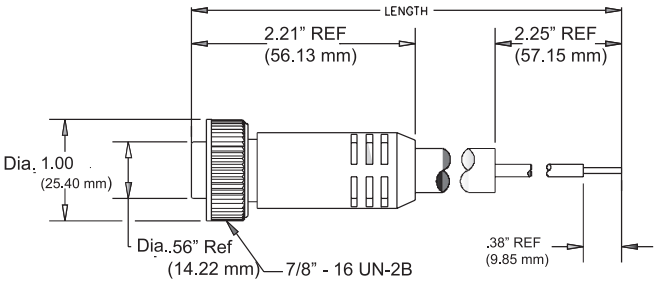

DFT Series Fiber Photoelectric Amplifiers

Compact rectangular plastic DIN-rail mount with Teach function - DC

- DIN-rail mounting
- Bargraph signal-strength indicator
- NPN or PNP, Light-on/Dark-on selectable outputs
- Red LED with visible spot
- IP64 rated

DFT Series Fiber Photoelectric Amplifier Selection Chart

Part Number	Price	Sensing Range	Output State	Logic	Connection	Wiring	Dimensions
DFT-AN-1A		Optical fiber Dependent	N.O./N.C. selectable	NPN	2m [6.5 ft] axial cable	Diagram 1	Figure 1
DFT-AN-1F					M8 [8mm] connector	Diagram 1	Figure 2
DFT-AP-1A				PNP	2m [6.5 ft] axial cable	Diagram 2	Figure 1
DFT-AP-1F					M8 [8mm] connector	Diagram 2	Figure 2

Specifications

Type	DFT-AN-1*	DFT-AP-1*
Sensing Distance	See Optical Fibers Table	
Light Spot Diameter	N/A	
Emission	red (680nm)	
Sensitivity	Dual Teach function	
Output Type	NPN Light-on or Dark-on Selectable Output delay or stretch programmable	PNP Light-on or Dark-on Selectable Output delay or stretch programmable
Operating Voltage	10-30VDC	
No-Load Supply Current	≤ 25mA	
Operating (Load) Current	≤ 200mA	
Off-state (Leakage) Current	≤ 0.1mA	
Voltage Drop	2V maximum at 200mA	
Switching Frequency	1.5 kHz	
Ripple	m20%	
Time Delay Before Availability (tv)	80ms	
Short-Circuit Protection	Yes (switch auto-resets after overload is removed)	
Operating Temperature	-25 to 55°C [-13 to 131°F]	
Protection Degree	IEC IP64	
LED Indicators -Switching Status	Yellow (output energized)	
Housing Material	PBT	
Lens Material	Acrylic	
Shock/Vibration	See terminology section	
Tightening Torque	N/A	
Weight (cable/connector)	68g [2.39oz] / 17g [0.60oz]	
Connectors	2m [6.5 ft] axial cable; M8 [8mm] connector	
Agency Approvals	UL file E328811	

To obtain the most current agency approval information, see the Agency Approval Checklist section on the specific part number's web page.

Dimensions

(mm)

Figure 1

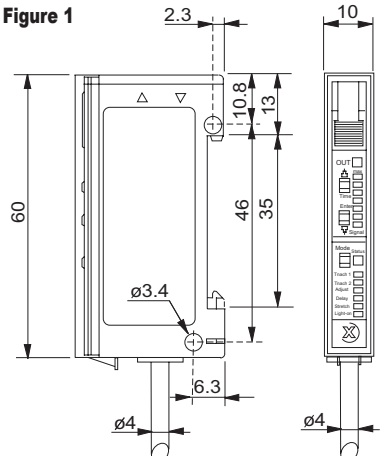

Figure 2

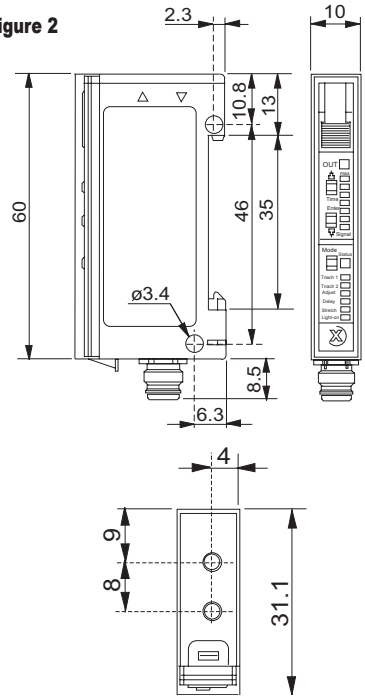

Wiring Diagrams

Diagram 1

NPN Output

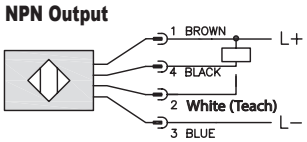

Diagram 2

PNP Output

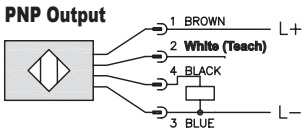

Connector

M8 Connector

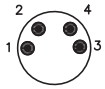

Switching Element Function

	Through-beam and Reflective Models	Diffuse Reflective Models
Light-on	N.C.	N.O.
Dark-on	N.O.	N.C.

DFP Series Fiber Photoelectric Amplifiers

Compact rectangular plastic DIN-rail mount DC

- DIN-rail mounting
- 12-turn potentiometer sensitivity setting with illuminated scale
- NPN or PNP, Light-on/Dark-on selectable outputs
- Red LED with visible spot
- IP64 rated

DFP Series Fiber Photoelectric Amplifier Selection Chart

Part Number	Price	Sensing Range	Output State	Logic	Connection	Wiring	Dimensions
DFP-AN-1A		Optical fiber dependent	N.O./N.C. selectable	NPN	2m [6.5 ft] axial cable	Diagram 1	Figure 1
DFP-AN-1F					M8 [8mm] connector	Diagram 1	Figure 2
DFP-AP-1A				PNP	2m [6.5 ft] axial cable	Diagram 2	Figure 1
DFP-AP-1F					M8 [8mm] connector	Diagram 2	Figure 2

Specifications

Type	DFP-AN-1*	DFP-AP-1*
Sensing Distance	See Optical Fibers Table	
Light Spot Diameter	N/A	
Emission	red (680nm)	
Sensitivity	12-turn Potentiometer with illuminated scale	
Output Type	NPN Light-on or Dark-on Selectable	PNP Light-on or Dark-on Selectable
Operating Voltage	10-30VDC	
No-load Supply Current	≤15mA	
Operating (Load) Current	≤200mA	
Off-state (Leakage) Current	≤0.1mA	
Voltage Drop	2V maximum at 200mA	
Switching Frequency	1.5kHz	
Ripple	≤20%	
Time Delay Before Availability (tv)	300ms	
Short-Circuit Protection	Yes (switch auto-resets after overload is removed)	
Operating Temperature	-25 to 55°C [-13 to 131°F]	
Protection Degree	IEC IP64	
LED Indicator - Switching Status	Pin 4 (black): switching status - yellow Pin 2 (pink): excess gain status - green	
Housing Material	PBT	
Lens Materials	Acrylic	
Shock/Vibration	See terminology section	
Tightening Torque	N/A	
Weight (cable/connector)	69g [2.44oz] / 18g [0.63oz]	
Connectors	2m [6.5 ft] axial cable; M8 [8mm] connector	
Agency Approvals	UL file E32881	

To obtain the most current agency approval information, see the Agency Approval Checklist section on the specific part number's web page.

Dimensions

(mm)

Figure 1

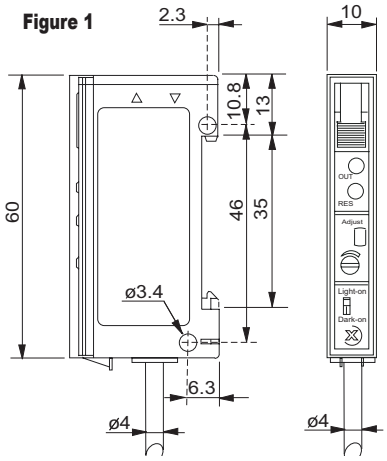

Figure 2

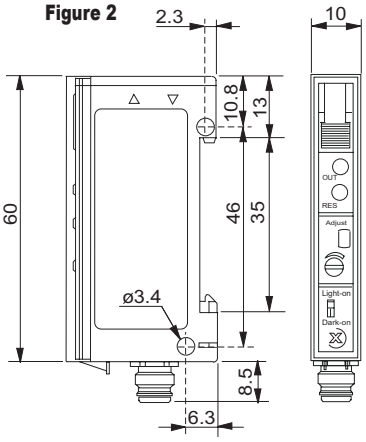

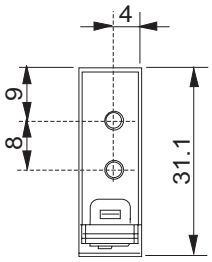

Wiring Diagrams

Diagram 1

NPN Output

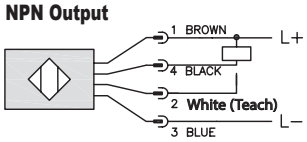

Diagram 2

PNP Output

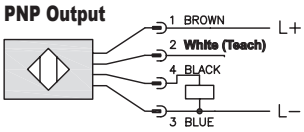

Connector

M8 Connector

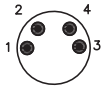

Switching Element Function

	Through-beam and Reflective Models	Diffuse Reflective Models
Light-on	N.C.	N.O.
Dark-on	N.O.	N.C.

Accessories for 50 Series Photoelectric Sensors

Mounting Brackets

Short, tall or ball-swivel style of mounting brackets are available. All styles allow 360° rotation of the sensor.

Note: Cutler-Hammer parts available for sale to North America locations only.

Accessories for Enhanced 50 Series Sensors			
Part Number	***Price***	***Description***	***Weight [lb]***
6150E-6501		Mounting bracket, right-angle, 1.5in vertical adjustment, nickel plated steel. For use with CH Enhanced 50 Series sensor.	0.20
6150E-6502		Mounting bracket, right-angle, 3.5in vertical adjustment, nickel plated steel. For use with CH Enhanced 50 Series sensor.	0.39
6150E-6503		Mounting bracket, right-angle ball swivel, 60 degree vertical and horizontal adjustment, plastic. For use with CH Enhanced 50 Series sensor. Ball swivel allows for ±30° angle.	0.11

Dimensions

mm [inches]

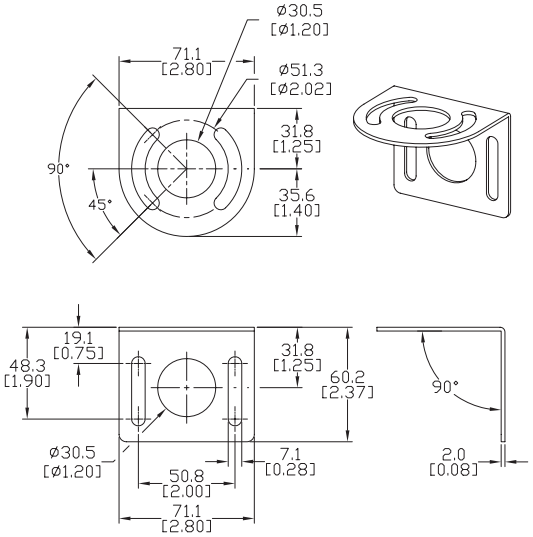

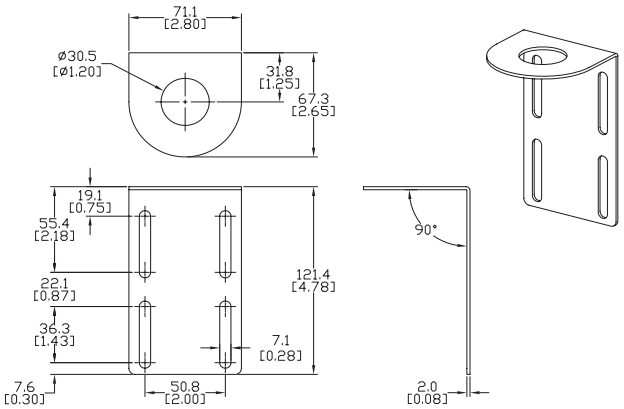

6150E-6501

6150E-6502

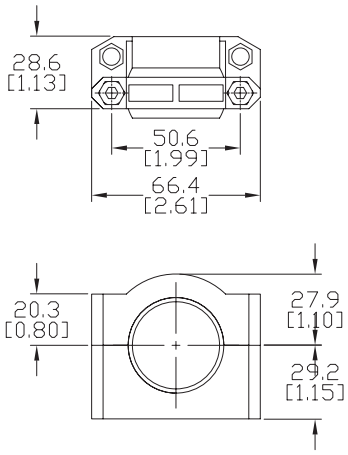

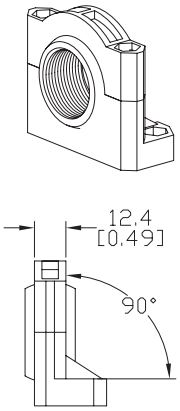

6150E-6503