C-more Micro 4-inch EA3 Touch Panel

Model EA3-T4CL ***C-more*** 4" Micro touch panel has a 4.3-inch TFT LCD 482 x 272 pixel display (WQVGA) and a palette of 32K colors for customizing objects, screen backgrounds and displaying bitmap graphics. EA3-T4CL is powered from a Class 2, 12-24 VDC power supply*. The panel is NEMA 4/4X indoor when installed correctly.

*NOTE: Recommended DC power supply to power the ***C-more*** Micro Panel, AutomationDirect Part No. PSL-24-010.

Part No. EA3-T4CL

Features

- Touch screen display
- Free downloadable programming software
- 482 x 272 pixel display (WQVGA) with up to 40 lines by 80 characters of text and graphics
- 32K colors
- Optional clear screen overlay
- 14MB memory
- Built-in USB type Micro-B programming port
- Built-in RJ45 Ethernet Port
- Built-in 15-pin serial communications port
- Built-in RJ12 serial communications port
- Built-in Alarm Control setup that activates beep, backlight flash, customized alarm banner, and red LED blinking
- 0 to 50 °C (32 to 122 °F) operating temperature range (IEC 60068-2-14)
- NEMA 4/4X, IP65 compliant when mounted correctly, indoor use only
- UL, cUL & CE agency approvals
- 2-year warranty from date of purchase

Function	Available
Ethernet	Yes (Built-in)
USB Programming Port	Yes
Serial RJ12 Port	Yes
Serial DB15 Port	No

Dimensions

Units: inches [mm]

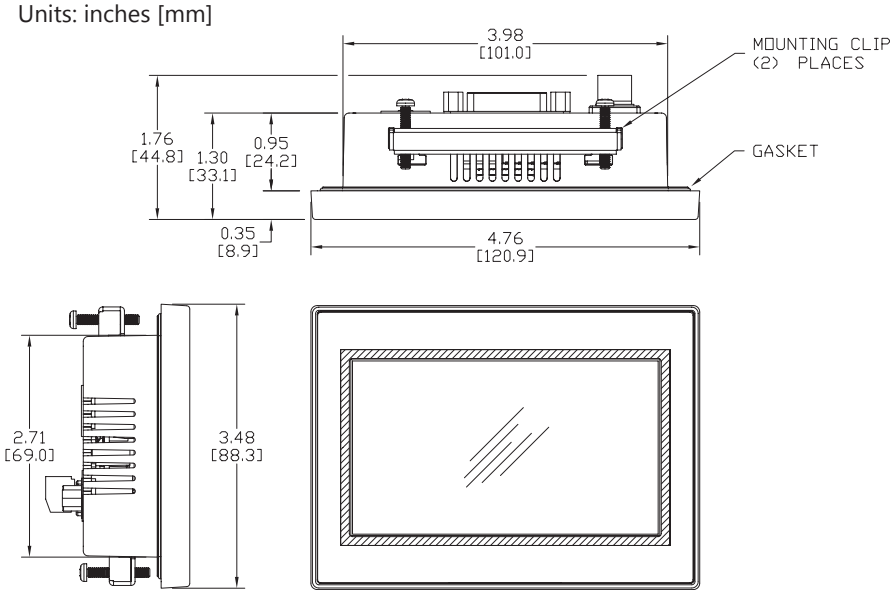

Panel Cutout

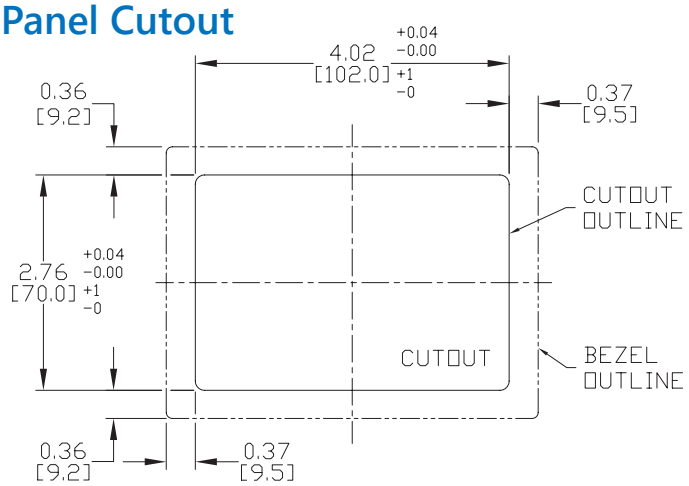

Panel Thickness

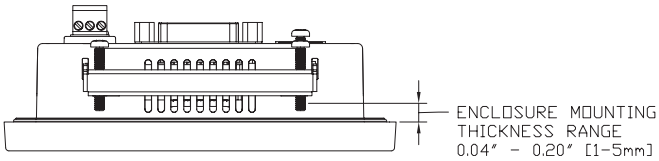

NOTE: Model EA3-T4CL and EA1-T4CL use different panel cutouts.

C-more Micro EA3-S3ML and EA3-T4CL Panel Specifications

EA3-S3ML and EA3-T4CL Specifications		
Part Number:	***EA3-S3ML***	***EA3-T4CL***
Description:	128 x 64 pixel LCD display Five user defined keypad function buttons with five user defined LED indicators	480 x 272 pixel LCD display
Display:		
• Type	3.1" STN Monochrome with LED Backlight	4.3" TFT Graphical type with LED Backlight
• Resolution	128 (W) x 64 (H) pixel	480 (W) x 272 (H) pixel
• Color	2 colors (normal / inverse)	32768 colors
• Display Brightness (Reference)	W: Typ. 150 nit G: Typ. 150 nit R: Typ. 40 nit	370 nits (typ)
• Viewing Area Size	2.78" (W) x 1.53" (H) 70.7 mm x 38.8 mm	3.89" (W) x 2.26" (H) 98.70 mm x 57.50 mm
• Active Area Size	2.62" (W) x 1.31" (H) mm 66.52 mm x 33.24 mm	3.74" (W) x 2.12" (H) mm 95.04 mm x 53.86 mm
• Contrast / Brightness	Adjusted from the panel's built-in configuration setup menu	
• Viewing Angle (Landscape Mode)	3, 6, 9 o'clock axis –> 45 degrees 12 o'clock axis –> 30 degrees	3, 6, 9, 12 o'clock axis –> 80 degrees
Backlight:		
• Type	LED	
• Color	White, Red, Green (12 colors)	White
• User Replaceable	No	
Touch Screen:		
•Type	Analog resistive, single touch*	
• Operation	100 gram force [0.8 N] maximum	82 gram force [0.98 N] maximum
• Life	Minimum of 1,000,000 cycles	
Features:		
• User Memory	3MB	14MB
• Number of Screens	Up to 999 – limited by project memory usage	
• Beep (Internal)	Yes	
• Keypad Function Buttons	Five user defined function key buttons with the ability to customize label with an overlay. Minimum of 500,000 cycles	N/A
• Keypad Function Button LEDs	Each function key button includes a red LED that can be user programmed.	N/A
• Programming Port	USB 2.0 Type Micro-B Built-in Ethernet port	
• Serial Communications	RJ12 serial communications port (RS-232) 15-pin D-sub serial communications port (RS-232, RS-485 / 422).	
• Ethernet Communications	10/100 Base-T (Automatic Negotiation MDI/MDIX)	
Screen Objects		
• Functional Devices	Pushbutton, Switch, Indicator Button, Indicator Light, Graphic Indicator Light, Numeric Display, Numeric Entry, Inc/Dec Value, Bar Graph, Bitmap Button, Static Bitmap, Dynamic Bitmap, Recipe Button, Static Text, Lookup Text, Dynamic Text, Screen Change Pushbutton, Screen Selector, Adjust Contrast, Function, Key Configuration Object, Real Time Graphics Line Graph, Analog Meter.	
• Static Shapes	Lines, Rectangles, Circles and Frames	
• Displayable Fonts	Fixed fonts: 4x6, 6x6, 6x6B, 6x8, 8x16, 8x32, 8x64, 16x16, 16x32, 16x64, 32x16, 32x32, 32x64, and Windows fonts	
***Note: The Touchscreen is designed to respond to a single touch. If it is touched at multiple points at the same time, an unexpected object may be activated.**		
***C-more* Micro EA3-S3ML and EA3-T4CL panel specifications continued on next page.**		

C-more Micro EA3-S3ML and EA3-T4CL Panel Specifications

EA3-S3ML and EA3-T4CL Specifications (cont'd)		
Part Number:	***EA3-S3ML***	***EA3-T4CL***
Electrical:		
• Input Power	RJ12 port to any AutomationDirect PLC RJ12 port (for serial communication only) USB Micro-B port to PC 10.2 - 26.4 VDC; Class 2 or SELV (Safety Extra-Low Voltage)or Limited Energy Circuit power supply	USB Micro-B port to PC 10.2 - 26.4 VDC; Class 2 or SELV (Safety Extra-Low Voltage)or Limited Energy Circuit power supply
• Power Consumption	1.05W (RJ12) 2W (USB) 3W (External Power Supply)	2.5W (USB) 4W (External Power Supply)
• Maximum Inrush Current	20A for 240µs (DC power supply)	22A for 240µs (DC power supply)
• Acceptable External Power Drop Duration	Maximum 1ms	
Environmental:		
• Operating Temperature	0 to 50 °C (32 to 122 °F); IEC 60068-2-14 (Test Nb, Thermal Shock)	
• Storage Temperature	–20 to +60 °C (–4 to +140 °F) IEC 60068-2-1 (Test Ab, Cold) IEC 60068-2-2 (Test Bb, Dry Heat) IEC 60068-2-14 (Test Na, Thermal Shock)	
• Humidity	5–95% RH (non-condensing)	
• Environmental Air	For use in Pollution Degree 2 environment, no corrosive gases permitted	
• Housing Material	ABS Plastic	ABS-GF20
• Gasket Material	Silicone Rubber	
• Overlay Sheet Material	PET	
• Vibration	IIEC60068-2-6 (Test Fc)	
• Shock	IEC60068-2-27 (Test Ea)	
• Altitude	Up to 2000m (6562ft)	
• Noise Immunity	(EN61131-2) EN61000-4-2 (ESD), EN61000-4-3 (RFI) EN61000-4-4 (FTB) EN61000-4-5 (Serge) EN61000-4-6 (Conducted) EN61000-4-8 (Power frequency magnetic field immunity) (Local Test) RFI, (145MHz, 440Mhz 10W @ 10cm) Impulse 1000V @ 1µs pulse	
• Enclosure	NEMA 250 type 4/4X indoor use only UL50 type 4X indoor use only IP-65 indoor use only (not tested by UL) (When mounted correctly)	
• Agency Approvals	CE (EN61131-2), UL61010, CUL Canadian C22.2, UL E157382, RoHS (2011/65/EU) To obtain the most current agency approval information, see the Agency Approval Checklist section on the specific part number's web page	
Physical		
• Enclosure Mounting Thickness Range	0.04" – 0.2" [1 – 5 mm]	
• Mounting Clip Screw Torque Range	21 – 28 oz·in [0.15 – 0.20 Nm]	
• Weight	6.7 oz. (190g)	7.76 oz. (220g)

C-more Micro EA3 Series PLC Drivers

PLC Drivers		
Serial - port1 or port2	***Serial - port2 only***	***Ethernet****
AutomationDirect Productivity Series	Allen-Bradley DF1 Half Duplex	AutomationDirect Productivity Series Ethernet
AutomationDirect Do-more / BRX**	Allen-Bradley DF1 Full Duplex	AutomationDirect Do-more / BRX Ethernet
AutomationDirect CLICK	Allen-Bradley PLC5 DF1	AutomationDirect CLICK Ethernet
AutomationDirect K-sequence	Allen-Bradley DH485	AutomationDirect ECOM Ethernet
AutomationDirect DirectNET	GE SNPX (90/30, 90/70, Micro 90, VersaMax Micro)	Modbus TCP/IP
AutomationDirect Modbus (master only)	Mitsubishi FX	Allen-Bradley EtherNet/IP(Client) SLC5/05
Modicon Modbus RTU (master only)	Mitsubishi Q & QnA	Allen-Bradley EtherNet/IP(Client) ENI Adapter
Entivity Modbus RTU (master only)	Omron Host Link (C200 Adapter, C500)	Allen-Bradley EtherNet/IP(Client) MicroLogix 1100/1400
	Omron FINS Serial (CJ1, CS1)	Allen-Bradley EtherNet/IP (Client) Control/CompactLogix (SLC Mapping only)
	Siemens PPI (S7-200 CPU)	
	AutomationDirect SOLO Temperature Controller	
	AutomationDirect GS Drives	

*** Ethernet port is built in to EA3-S3ML and EA3-T4CL. EA3-T6CL requires the optional EA-ECOM module for Ethernet.**
Ethernet communications require external power supply.
**** BX-P-SER2-RJ12 is required**

C-more Micro EA3 Series Power Connection Wiring

EA3-S3ML-RN and EA3-S3ML-R

- EA3-S3ML-RN and EA3-S3ML-R ***C-more*** Micro panels are powered during programming from the PC through the USB to RS-232 Programming Cable Assembly, EA-MG-PGM-CBL.
- During operation, EA3-S3ML-RN and EA3-S3ML-R ***C-more*** Micro panels can be powered from most AutomationDirect PLC's RJ12 serial communications ports by using the DV-1000CBL communications cable.

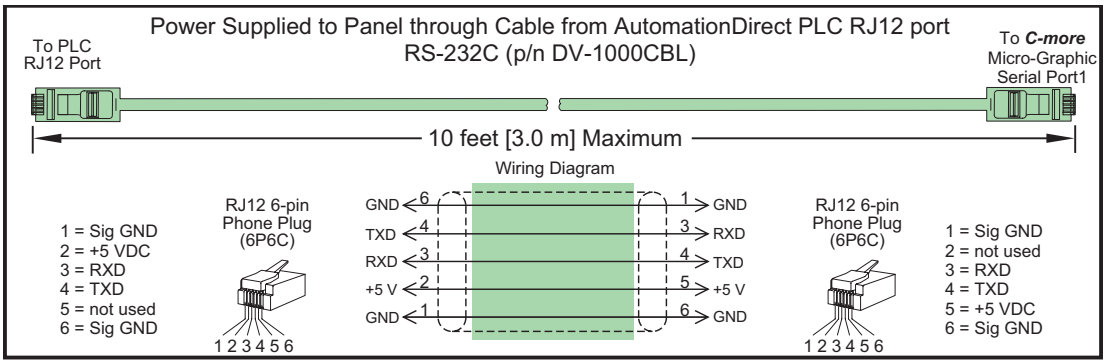

EA3-S3ML, EA3-T4CL and EA3-T6CL

EA3-S3ML, EA3-T4CL and EA3-T6CL ***C-more*** Micro EA3 series panels are powered by a Class 2, 2.5 Amp @ 12-24 VDC power source in normal operation.

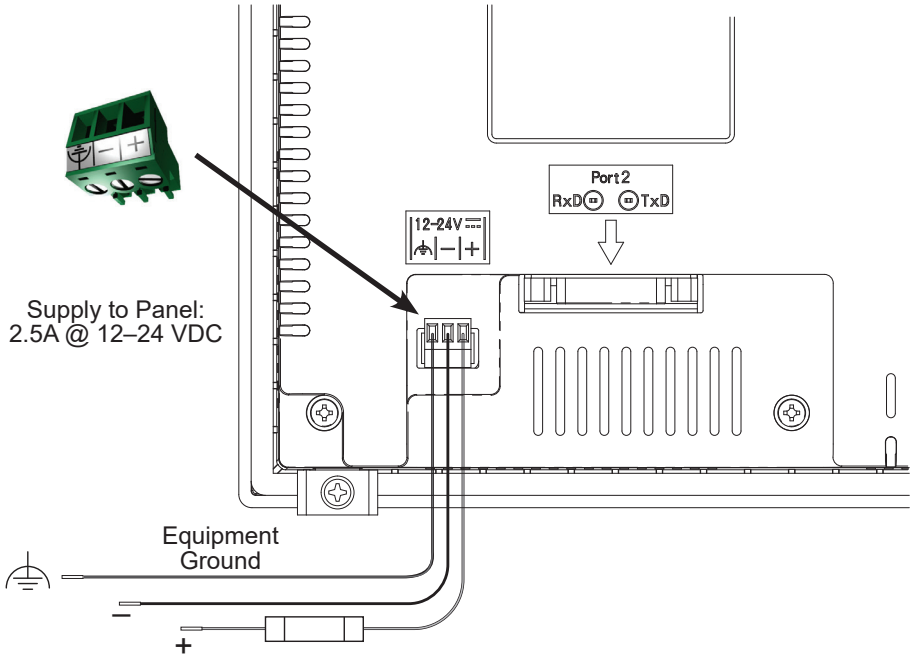

WARNING: USING A DIFFERENTIAL POWER SUPPLY AND CONNECTION THE USB TO A PC CAN DAMAGE BOTH THE PANEL AND THE PC.

C-more Micro EA3 Series PLC Connections

Cabling requirements

The table below decribes the EA3 series cabling options available for most AutomationDirect PLCs.

EA3 Series Cabling Options			
Part Number	Port1 RJ12 (RS-232)	Port2 15-pin (RS-232) See PLC List A	Port2 15-pin (RS-232) See PLC List B
EA3-S3ML	DV-1000CBL*	EA-2CBL	EA-2CBL-1
EA3-S3ML-R		N/A	N/A
EA3-S3ML-RN			
EA3-T4CL	DV-1000CBL, D0-CBL	EA-2CBL	EA-2CBL-1
EA3-T6CL			
PLC List A	Productivity Series, Do-more / BRX**, CLICK, DL05, DL105, DL205, D3-350, D4-450 phone jack		
PLC List B	D2-250, D250-1, D2-260, DL06 VGA connector		

***Cable can provide +5VDC for panel power**
****BX-P-SER2-RJ12 is required**

Drivers for your Controller

- AutomationDirect Productivity Series – serial / Ethernet*
- AutomationDirect Do-more / BRX – serial / Ethernet*
- AutomationDirect CLICK (Modbus(master only))– serial / Ethernet*
- ***Direct***LOGIC K-sequence, ***Direct***LOGIC ***Direct***NET, ***Direct***LOGIC Modbus (master only) (Koyo Addressing) ***Direct***LOGIC ECOM Ethernet*
- Modbus RTU (master only) Modbus TCP/IP*
- Allen-Bradley DF1 Full Duplex, Allen-Bradley DF1 Half Duplex, Allen-Bradley PLC5 DF1, AB DH485, Allen-Bradley EtherNet/ IP (Client) SLC5/05, NET-ENI, MicroLogix 1100/1400*, Control/ CompactLogix (SLC mapping only)
- Omron Host Link (C200 Adapter, C500) Omron FINS serial (CJ1, CS1)
- GE SNPX (90/30, 90/70, Micro 90, VersaMax Micro)
- Mitsubishi Melsec FX
- Siemens PPI
- Entivity Modbus RTU (master only)
- AutomatiionDirect GS Drives
- AutomationDirect SOLO Temperature Controllers
- Mitsubishi Q/QnA

**** Ethernet port is built in to EA3-S3ML and EA3-T4CL and EA3-T6CL require the optional EA-ECOM module for Ethernet.***

Communication Ports

EA3-S3ML-RN & EA3-S3ML-R

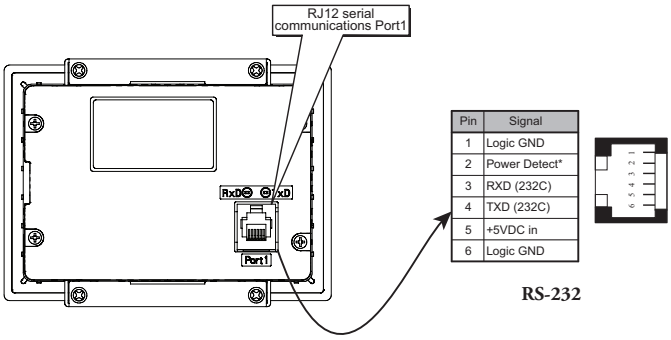

Pin	Signal
1	Logic GND
2	Power Detect*
3	RXD (232C)
4	TXD (232C)
5	+5VDC in
6	Logic GND

RS-232

EA3-S3ML & EA3-T4CL

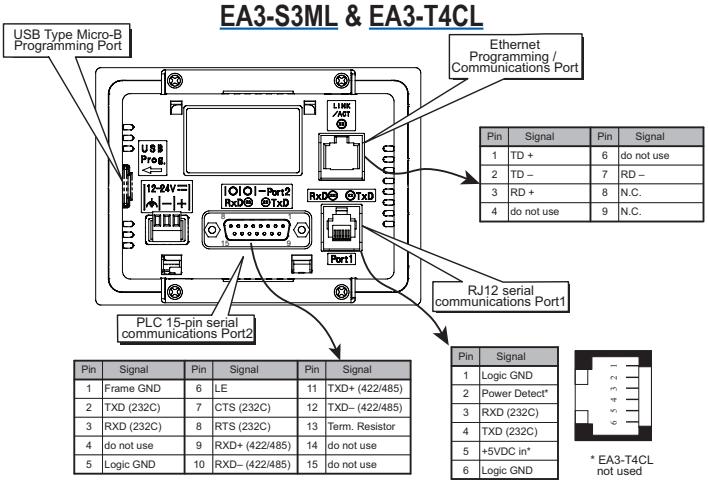

Pin	Signal	Pin	Signal
1	TD +	6	do not use
2	TD –	7	RD –
3	RD +	8	N.C.
4	do not use	9	N.C.

Pin	Signal	Pin	Signal	Pin	Signal
1	Frame GND	6	LE	11	TXD+ (422/485)
2	TXD (232C)	7	CTS (232C)	12	TXD– (422/485)
3	RXD (232C)	8	RTS (232C)	13	Term. Resistor
4	do not use	9	RXD+ (422/485)	14	do not use
5	Logic GND	10	RXD– (422/485)	15	do not use

RS-232/422/485

Pin	Signal
1	Logic GND
2	Power Detect*
3	RXD (232C)
4	TXD (232C)
5	+5VDC in*
6	Logic GND

* EA3-T4CL not used

RS-232

EA3-T6CL

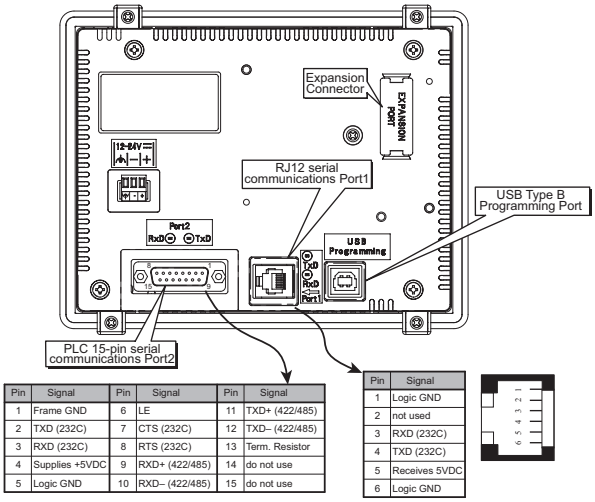

Pin	Signal	Pin	Signal	Pin	Signal
1	Frame GND	6	LE	11	TXD+ (422/485)
2	TXD (232C)	7	CTS (232C)	12	TXD– (422/485)
3	RXD (232C)	8	RTS (232C)	13	Term. Resistor
4	Supplies +5VDC	9	RXD+ (422/485)	14	do not use
5	Logic GND	10	RXD– (422/485)	15	do not use

RS-232/422/485

Pin	Signal
1	Logic GND
2	not used
3	RXD (232C)
4	TXD (232C)
5	Receives 5VDC
6	Logic GND

RS-232

C-more Micro EA3 Panel Accessories

D-SUB 15-pin 90-degree Communication Port Adapter

The EA-ADPTR-4 adapter plugs into the 15-pin serial port on the rear of ***C-more*** Micro EA3 Series 3-inch*, 4-inch and 6-inch panels to allow a controller communication cable to be plugged in at a 90 degree angle to reduce panel depth requirements. 15-pin straight through pin-out. UL Recognized.

* EA3-S3ML-RN and EA3-S3ML-R are not equipped with a 15-pin serial port.

Part No.
EA-ADPTR-4

Dimensions

Units: inches [mm]

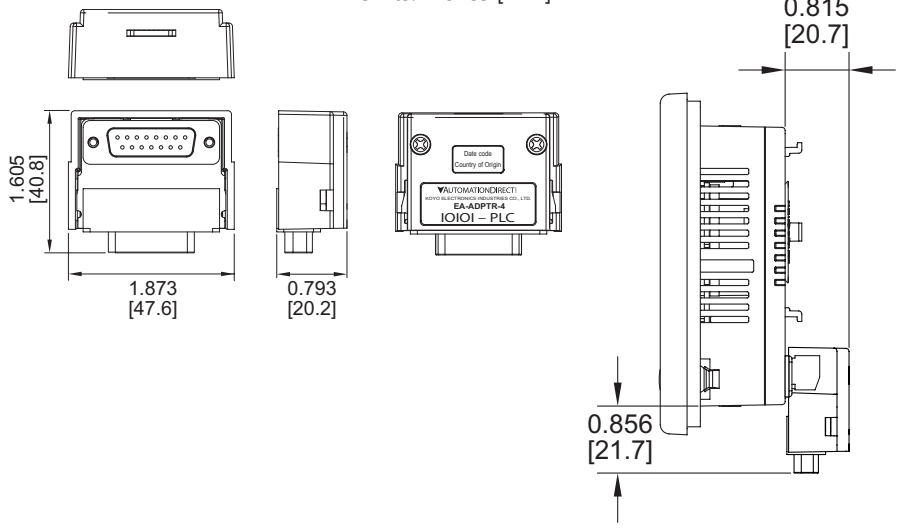

D-SUB 15-pin to Terminal Block Adapter

The EA-COMCON-3 adapter plugs into the 15-pin serial port on the rear of ***C-more*** Micro EA3 Series 3-inch*, 4-inch and 6-inch panels to allow wire terminal connections for an RS-422/RS-485/DH485 PLC communication cable. UL Recognized.

* EA3-S3ML-RN and EA3-S3ML-R are not equipped with a 15-pin serial port.

Part No.
EA-COMCON-3

Dimensions

Units: inches [mm]

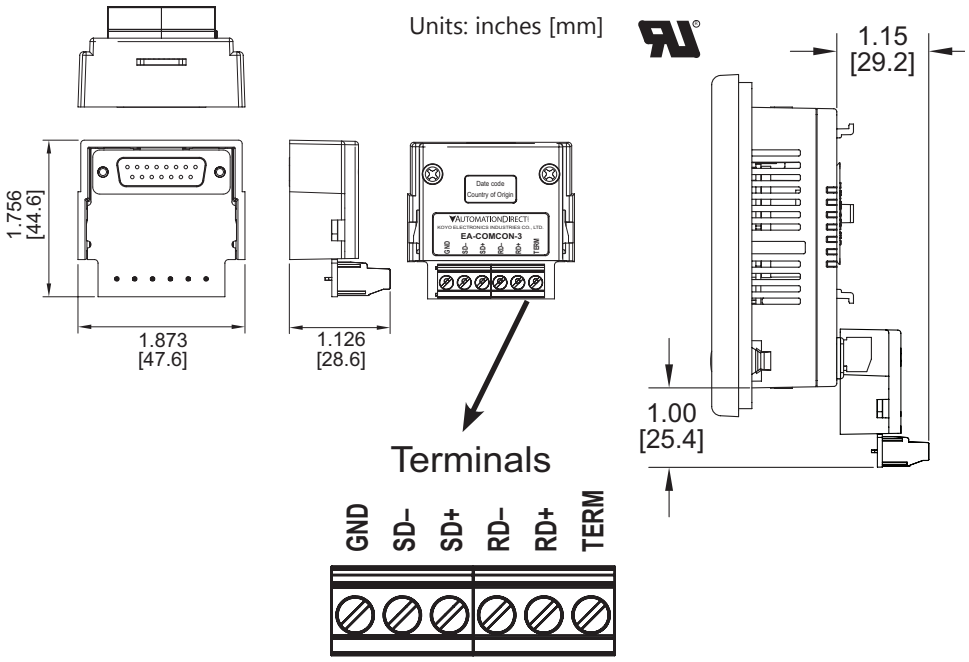

C-more Micro EA3 Panel Accessories

Clear Screen Overlay

Optional clear screen overlay used to protect ***C-more*** Micro displays from minor scratches and wear.
EA-MG-COV-CL contains 5 clear screen overlays. All other packages contain 3 clear screen overlays.

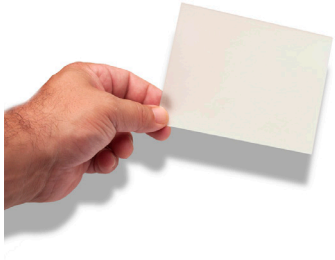

Part No. EA-MG-COV-CL

Part No. EA-4-COV3

Part No. EA-6-COV2

Part No. EA-8-COV2

Part No. EA-10-COV2

Dimensions

Units: inches [mm]

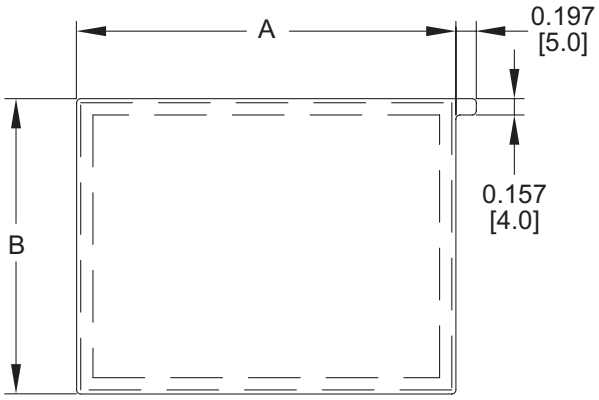

Part Number	Dimensions - inch [mm]	
	A	B
EA-MG-COV-CL	3.13 [79.4]	1.75 [44.4]
EA-4-COV3	4.15 [105.5]	2.52 [64.0]
EA-6-COV2	4.91 [124.8]	3.80 [96.4]
EA-8-COV2	7.32 [185.8]	5.44 [138.2]
EA-10-COV2	8.91 [226.2]	6.61 [168.0]

C-more Micro 3-inch and 4-inch EA3 Panel Replacement Parts

Replacement parts at a glance:

Part Number	Description	Price
EA-MG-S3ML-BRK	***C-more*** Micro panel mounting brackets, replacement. Package of 2. For use with ***C-more*** Micro 3in and EA3-T4CL HMIs.	
EA-MG-DC-CON	***C-more*** Micro DC 3-terminal power connector, replacement. Package of 5. For use with all ***C-more*** Micro 4in, 6in, 8in and 10in panels, and power adapters EA-MG-P1 and EA-MG-SP1.	
EA-MG-S3ML-GSK	***C-more*** Micro panel mounting gasket, replacement. For use with ***C-more*** Micro EA1 series 3in HMIs.	
EA-4-GSK	***C-more*** Micro panel mounting gasket, replacement. For use with ***C-more*** Micro EA3-T4CL 4in HMIs.	
EA-MG-S3ML-FKL	***C-more*** Micro function key label insert, replacement. Package of 10. For use with ***C-more*** Micro 3in HMIs. (5) blank labels and (5) landscape F1-F5 label included.	

Panel Mounting Clips
Part No. EA-MG-S3ML-BRK

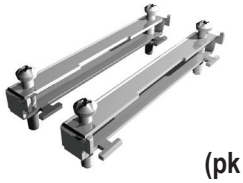

(pk of 2)

3" Panel Gasket
Part No. EA-MG-S3ML-GSK

EA3-T4CL Panel Gasket
Part No. EA-4-GSK

DC Power Connector
Part No. EA-MG-DC-CON

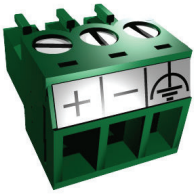

(pk of 5)

3" Panel Function Keys Label Inserts
Part No. EA-MG-S3ML-FKL

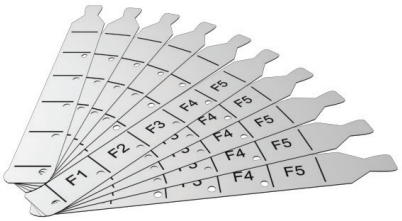

(pk of 10 - 5 blank, 5 F1-F5)

C-more Micro Communication Cables and Cable Kits

Cable Description	Cable Part Number	Price
Cables for direct connect to panel's serial Port1 (Panel powered from PLC's serial port.)		
Networking cable, RS-232 (RJ12 6P6C) to RS-232 (RJ12 6P6C), shielded, 12ft cable length. For use with CLICK, DL05, D2-240, D4-450 and Productivity3000 PLCs.	D0-CBL	
DirectLOGIC DL06 connector, 15-pin D-sub HD15 male to RJ12 female. For use with DL06 CPUs and DL205 D2-250, D2-250-1, D2-260 and D2-262 CPUs.	FA-15HD	
DirectLOGIC universal cable kit, for use with all DirectLOGIC PLCs with RS-232 ports.	FA-CABKIT	
Cables used with serial Port2		
AutomationDirect communication cable, 15-pin male D-sub to 6-pin RJ12, shielded, 9.8ft/3m cable length. For use with ***C-more*** or ***C-more*** Micro panel and AutomationDirect PLCs with RJ12 ports.	EA-2CBL	
AutomationDirect communication cable, 15-pin male D-sub to 15-pin D-sub HD15 male, shielded, 3m/9.8ft cable length. For use with ***C-more*** or ***C-more*** Micro panel and a DL06, D2-250(-1), D2-260 or D2-262 (bottom port) CPU.	EA-2CBL-1	
AutomationDirect communication cable, 15-pin male D-sub to 4-pin RJ11, shielded, 3m/9.8ft cable length. For use with ***C-more*** or ***C-more*** Micro panel and a D3-340 CPU top or bottom port.	EA-3CBL	
AutomationDirect communication cable, 15-pin male D-sub to 15-pin male D-sub, shielded, 3m/9.8ft cable length. For use with ***C-more*** or ***C-more*** Micro panel and a DL405 (top port) CPU.	EA-4CBL-1	
AutomationDirect communication cable, 15-pin male D-sub to 25-pin male D-sub, shielded, 3m/9.8ft cable length. For use with ***C-more*** or ***C-more*** Micro panel and a D2-DCM, D3-232-DCU, D3-350 (bottom port) or DL405 (bottom port) CPU.	EA-4CBL-2	
AutomationDirect communication cable, 15-pin male D-sub to 8-pin male mini DIN, shielded, 3m/9.8ft cable length. For use with ***C-more*** or ***C-more*** Micro panel and an Allen-Bradley Micrologix CPU.	EA-MLOGIX-CBL	
AutomationDirect communication cable, 15-pin male D-sub to 9-pin female D-sub, shielded, 3m/9.8ft cable length. For use with ***C-more*** or ***C-more*** Micro panel and an Allen-Bradley SLC 5/03, 5/04 or 5/05 CPU with DF-1 port.	EA-SLC-232-CBL	
AutomationDirect communication cable, 15-pin male D-sub to 25-pin male D-sub, 3m/9.8ft cable length. For use with ***C-more*** or ***C-more*** Micro panel and an Allen-Bradley PLC-5 CPU with a DF1 port.	EA-PLC5-232-CBL	
AutomationDirect communication cable, 15-pin male D-sub to 6-pin RJ45, shielded, 3m/9.8ft cable length. For use with ***C-more*** or ***C-more*** Micro panel and an Allen-Bradley SLC 5/01, 5/02 or 5/03 CPU with a DH485 port cable.	EA-DH485-CBL	
AutomationDirect communication cable, 15-pin male D-sub to 15-pin male D-sub, shielded, 3m/9.8ft cable length. For use with ***C-more*** or ***C-more*** Micro and GE Fanuc Series 90/30 or 90/70 serial port.	EA-90-30-CBL	
AutomationDirect communication cable, 15-pin male D-sub to 25-pin male D-sub, 3m/9.8ft cable length. For use with ***C-more*** or ***C-more*** Micro panel and a Mitsubishi FX Series CPU.	EA-MITSU-CBL	
AutomationDirect communication cable, 15-pin male D-sub to 8-pin male mini DIN, shielded, 3m/9.8ft cable length. For use with ***C-more*** or ***C-more*** Micro panel and a Mitsubishi FX Series CPU.	EA-MITSU-CBL-1	
AutomationDirect communication cable, 15-pin male D-sub to 25-pin male D-sub, shielded, 3m/9.8ft cable length. For use with ***C-more*** or ***C-more*** Micro panel and an Omron C200 or C500 CPU.	EA-OMRON-CBL	
Note: Adding the optional EA-ECOM module allows communication via an Ethernet connection (EA3 series only).		

D0-CBL

FA-15HD

FA-CABKIT

EA-2CBL-1

EA-2CBL

EA-4CBL-1

EA-3CBL

EA-MLOGIX-CBL

EA-4CBL-2

EA-PLC5-232-CBL

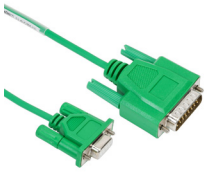
EA-SLC-232-CBL

EA-DH485-CBL

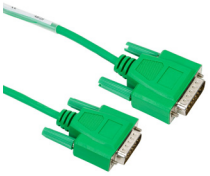
EA-90-30-CBL

EA-MITSU-CBL

EA-MITSU-CBL-1

EA-OMRON-CBL

C-more Micro Programming Software

FREE software!

C-more Micro Programming Software can be downloaded at no charge or a USB version may be purchased by ordering EA-MG-PGMSW. The software requires a USB port or Ethernet connection* on your PC to connect to the ***C-more*** Micro panel. Software Help Files are included in the download. This software programs all the ***C-more*** Micro panels (does not program the ***C-more*** 6-inch through 15-inch touch panels).

Note: This software is used to program ***C-more*** Micro panels only.

Note: The Ethernet port is built in to EA3-S3ML and EA3-T4CL and EA3-T6CL requires the optional EA-ECOM module for Ethernet.

Part Number	Panel Software / Firmware Version Required
EA3-S3ML-RN	4.30 or later
EA3-S3ML-R	
EA3-S3ML	4.20 or later
EA3-T4CL	
EA3-T6CL	3.6 or later

C-more Micro Programming Software is a spin-off of its powerful sibling ***C-more*** Touch Panel. It offers very high end features designed to reduce your configuration time. Simply drag and drop the objects from the object list (right side of screen) onto the screen construction area. Then configure your PLC tags and click on the objects you wish to use. Use the built-in simulator to review your work on your PC before ever downloading your project! The time saving benefits of the ***C-more*** Micro configuration software could easily pay for the panel. Check out www.CmoreMicro.com to download a free version.

Built-in project simulator

- Runs your project on your PC
- Test all of your screens before downloading
- Time savings pays for the panel
- Simulate function keys and keypad bezel

Built-in user object/ screen libraries

Save time by re-using your custom objects and screens.

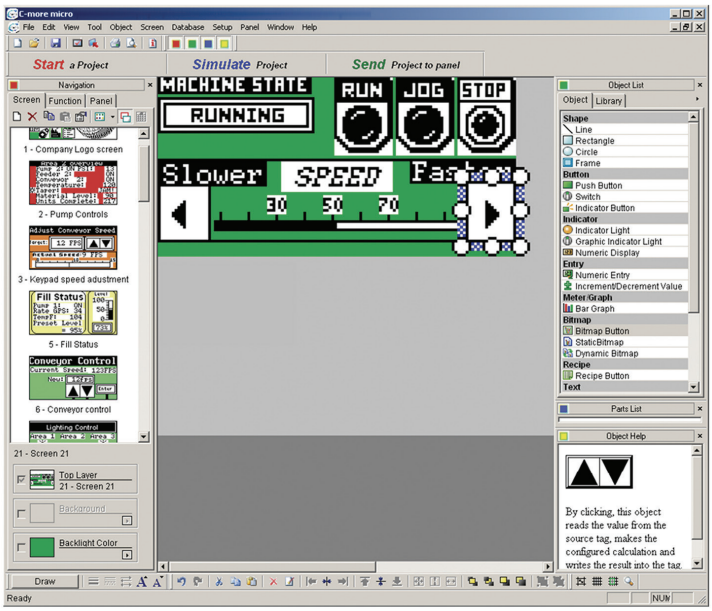

Thumbnail project preview pane

Helps keep track of multi-screen projects.

Scrolling object selection window

Lets you find the object you want fast. Just drag and drop it on the screen.

PC requirements

Following are the minimum system requirements for running ***C-more*** Micro Programming Software, EA-MG-PGMSW, on a PC:

- Windows® Operating System (See automationdirect.com for specific operating system requirements.)
- 150 MB free hard-disk space
- USB port for installing software from the USB, or internet access to download free programming software
- USB port to use with the correct Programming Cable Assembly for project transfer from the programming software to the panel

Scrolling help window

Gives you helpful information on each object