FTS Series (-1002) Liquid / Air Thermal Flow Sensors

Part No. FTS200-1002

Overview

AutomationDirect's ProSense FTS series thermal flow sensors offer a very cost effective solution optimized for monitoring water, glycol solutions, or air flow for applications where high accuracy is not required. With no moving parts, thermal flow sensors are a reliable alternative to other flow sensing technologies and mechanical flow switches. Using the pushbuttons and display the FTS series can be easily set up to measure flow velocity in feet per second (fps) or by entering the internal pipe diameter volumetric flow rate can be measured in gallons per minute (gpm) or cubic feet per minute (cfm). Available with probe lengths of either 100mm or 200mm the FTS can be used in pipes up to 16 inches in internal diameter. Flow velocity measurement in larger pipe sizes or other shapes such as rectangular ducts is also possible using feet per second (fps) operating mode. The FTS (-1002) series offers two separate analog outputs that can be used monitor continuous flow rate and temperature. The 4-digit, two-color alphanumeric display and LEDs are used during configuration and provide clear indication of the measured variable. Installation is accomplished using the CF08 compression type progressive ring fitting accessory (purchased separately).

Features

- Cost effective solution for flow switch or flow transmitter measurement where high accuracy is not required
- Optimized for flow measurement of water, glycol solutions or air
- Volumetric flow rate measurement in pipe sizes up to 16 inches ID
- Measure fluid/air temperature in addition to flow
- 4-digit, two color alphanumeric display with pushbutton setup
- 100mm or 200mm probe length
- Two analog output signals for flow and temperature
- 4-pin M12 quick disconnect electrical connection
- 5-year warranty

For a variety of cable options see our website

Output Function Selections

Output 1:

- Analog signal for temperature

Output 2:

- Analog signal for flow

ProSense FTS Series (-1002) Thermal Flow Sensors Specifications		
Model	***FTS100-1002***	***FTS200-1002***
Price		
	Application	
Media	Water, glycol solutions and air	
Medium Temperature	-4ºF to 212ºF (-20ºC to 100ºC)	
Pressure Rating	50bar (725psi)	
	Electrical Data	
Operating Voltage	18 to 30 VDC	
Current Consumption	< 100mA	
Protection Class	III	
Reverse Polarity Protection	Yes	
Power-on Delay Time	10s	
	Outputs	
Outputs	OUT1: Analog OUT2: Analog	
Analog Output	4 to 20 mA (scalable) Max load: 350Ω	
Short-Circuit Protection	Yes	
Overload Protection	Yes	

ProSense® FTS Series (-1002) Liquid / Air Thermal Flow Sensors

ProSense FTS Series (-1002) Thermal Flow Sensors Specifications Continued		
Model	***FTS100-1002***	***FTS200-1002***
	Measuring Range	
Probe Length (mm)	100mm	200mm
	Liquids (Water & Glycol Solutions)	
Measuring Range	0.15 to 9.85 ft/s	
Resolution	0.05 ft/s	
Setting Range	0 to 9.85 ft/s	
Analog Start Point ASP	0 to 7.95 ft/s	
Analog End Point AEP	1.9 to 9.85 ft/s	
Glycol Reference Medium*	35% Ethylene glycol solution	
	Gases (Air)	
Measuring Range	6 to 328 ft/s	
Resolution	2 ft/s	
Setting Range	0 to 328 ft/s	
Analog Start Point ASP	0 to 264 ft/s	
Analog End Point AEP	64 to 328 ft/s	
	Temperature Monitoring	
Measuring Range	-4 to 212°F (-20 to 100°C)	
Resolution	0.5°F	
Analog Start Point ASP	-4 to 169°F (-20 to 76.1°C)	
Analog End Point AEP	39 to 212°F (3.9 to 100°C)	
In Steps Of	0.5°F	
	Accuracy / Deviations	
	Flow Monitoring	
Temperature Drift [fps x 1/K]	0.01 fps x 1/K (< 68°F; > 158°F)	
Max. Temperature Gradient of Medium [K/min]	100	
Accuracy (In the Measuring Range)	7% measured value (MW) + 2% measured end value (MEW); water: 68 to 158 °F; inlet length: 5 ft; DN25 (DIN 2448); mounting position according to instructions; Accuracy can differ for other media and mounting positions.	
Repeatability	0.05 m/s; (water; Flow velocity: 0.05 to 3 m/s)	
	Temperature Monitoring	
Temperature Drift	± 0.003 K/°F	
Accuracy [K]	± 0.3 / ± 1; (water; Flow velocity: 1 to 9.85 fps / air; Flow velocity: > 32.8 fps)	
	Reaction Times (per DIN EN 60751)	
Flow Response Time	Water; glycol: 0.8 s; air: 7 s (each T09)	
Temperature Response Time	1.5 s (T09); (water; Flow velocity: 1 to 9.85 fps)	

**The glycol medium setting on the sensor is designed for a 35% glycol/water solution. Increasing the glycol concentration decreases the measured value. Likewise, decreasing the concentration increases the measuring value. For a concentration of 50% glycol, there is an estimated decrease in measured value of about -25%. For a concentration of 15% glycol, there is an estimated increase in the measured value of about +25%.*

ProSense® FTS Series (-1002) Liquid / Air Thermal Flow Sensors

ProSense FTS Series (-1002) Thermal Flow Sensors Specifications Continued		
Model	***FTS100-1002***	***FTS200-1002***
Operating Conditions		
Ambient temperature	-40 to 176°F (-40 to 80°C)	
Storage temperature	-40 to 212°F (-40 to 100°C)	
Protection	IP 65; IP 67	
Tests / Approvals		
EMC	DIN EN 60947-5-9	
Shock resistance	DIN EN 60068-2-27 @ 50 g (11 ms)	
Vibration resistance	DIN EN 60068-2-6 @ 5 g (10 to 2000 Hz)	
UL approval	E320431	
CE	EMC; RoHS II	
Mechanical Data		
Weight	0.65 lb (296.5 g)	
Material	Stainless steel (1.4404 / 316L); PBT-GF20; PBT-GF30	
Materials (wetted parts)	Stainless steel (1.4404 / 316L)	
Process Connection	Diameter 8mm	
Displays / Operating Elements		
Display	Display Unit: 5 x LED, green (fps, gpm, cfm, °F, 10^3)	
	Measured values: alphanumeric display, red/green 4-digit, 9mm character height	
Electrical Connection		
Connector	1 x M12	
Contacts	Gold plated	

Note: Check the chemical compatibility of the sensor's wetted parts with the medium to be measured.

Wiring Diagram

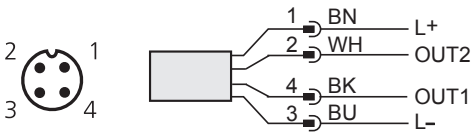

Cable Assembly Wiring Colors:
Pin 1 - Brown
Pin 2 - White
Pin 3 - Blue
Pin 4 - Black

Colors to DIN EN 60947-5-2

For additional wiring details see individual product manuals.

Note: Wiring colors are based on AutomationDirect CD12L and CD12M 4-pole cable assemblies.

Output Function Selections

Models:
FTS100-1002. FTS200-1002
Output 1:
Analog output Temperature monitoring

Output 2:
Analog output Volumetric flow rate monitoring

Click or scan the above QR code to be taken to the installation insert for the FTSx00-1002 Liquid/ Air Thermal Flow Switches

Dimensions

mm [inches]

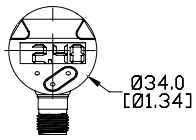

Dimensions mm [inches]	
Part No.	***A***
FTS100-100x	100mm [3.94 in]
FTS200-100x	200mm [7.87 in]

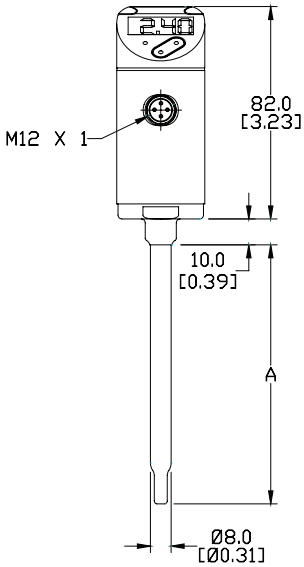

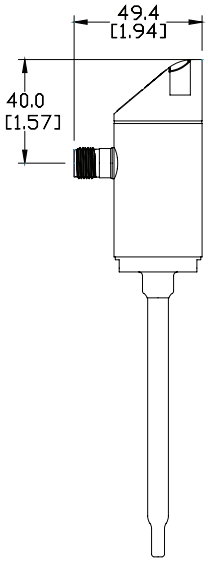

See our website _____ for complete Engineering drawings.

Liquid Flow Conversions

To convert from flow velocity to flow rate, use the following formula:

$$V = v \times A$$

Where V = volumetric flow rate

v = flow velocity

A = cross sectional area of the pipe

Take care to ensure all the units of measure are consistent. The following charts can be used in lieu of the calculation for round pipes. Find the volumetric flow rate on the y-axis. (Example: 10 GPM) Follow the line horizontally until it intersects the line for pipe diameter. (Example: 3/4" pipe diameter). From the intersection point, drop straight down to read the x-axis to find the given flow velocity. (Example: 6 ft/sec)

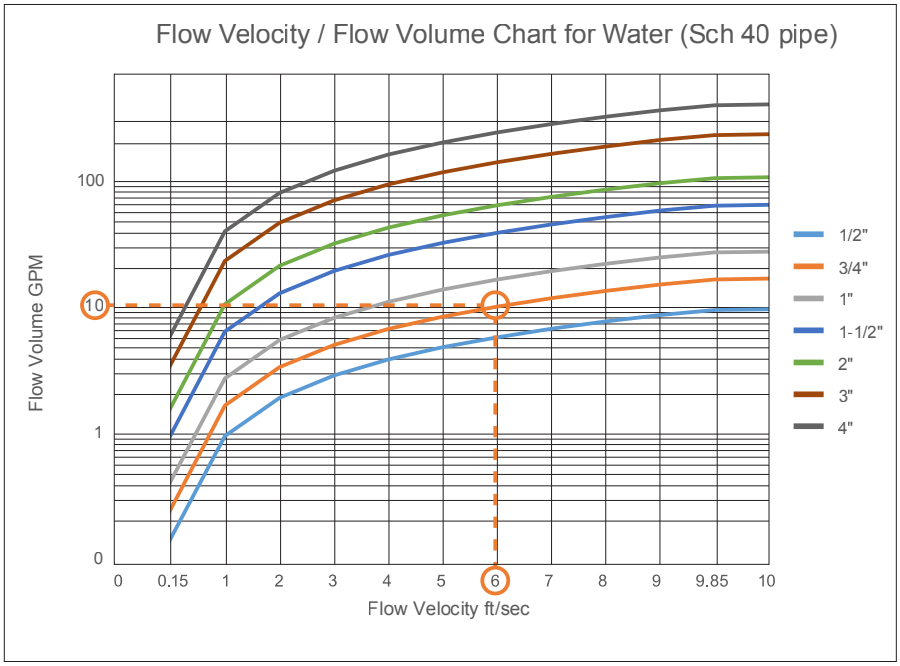

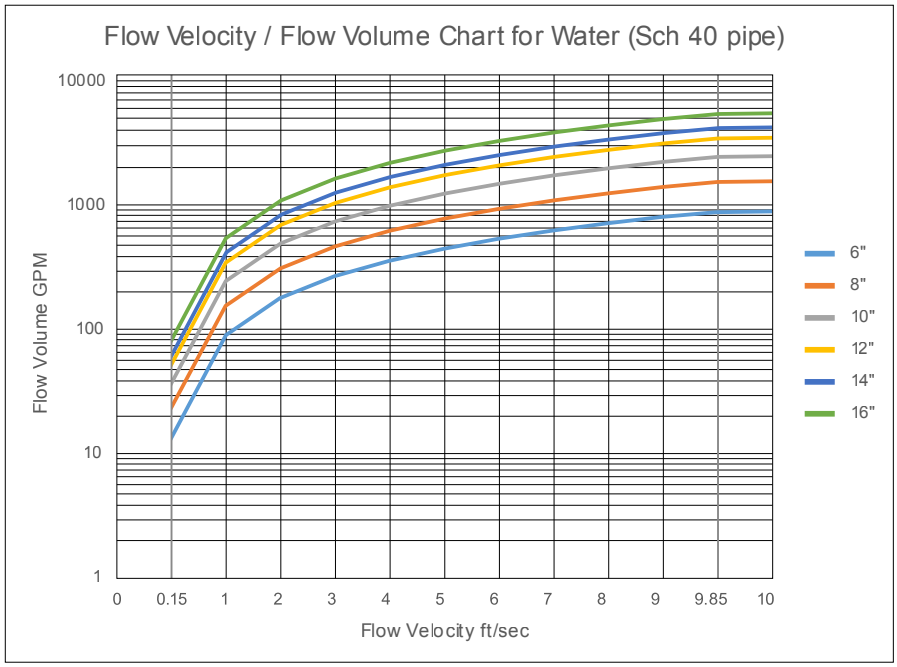

Gas Flow Conversions

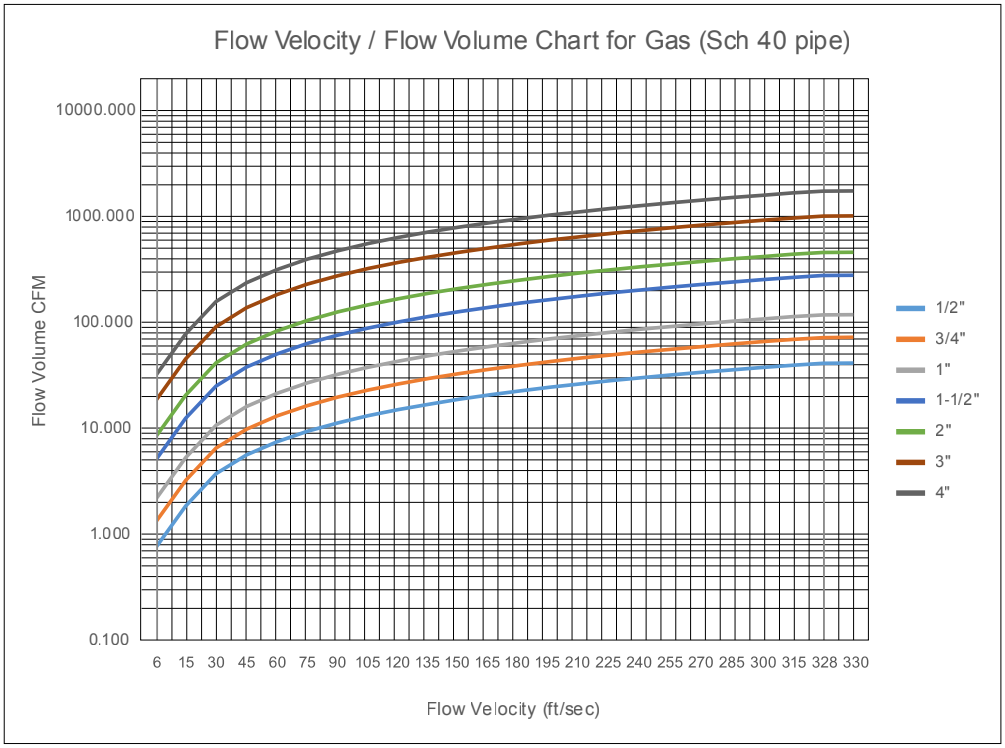

FTS Series Liquid / Air Thermal Flow Sensor Accessories

FTS Series Liquid / Air Flow Sensor Accessories

CF08-25N

CF08-50N

Part No.	Description	Pcs/Pkg	Weight (lbs)	Price
CF08-25N	ProSense compression fitting, stainless steel, 1/4in male NPT process connection. For use with 8mm outside diameter sensor probes.	1	0.1	
CF08-50N	ProSense compression fitting, stainless steel, 1/2in male NPT process connection. For use with 8mm outside diameter sensor probes.	1	0.2	

Dimensions

mm [inches]

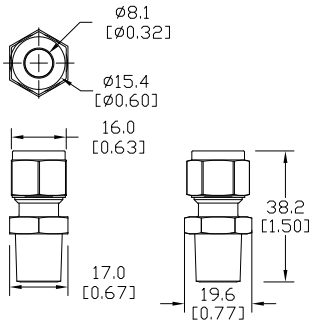

CF08-25N

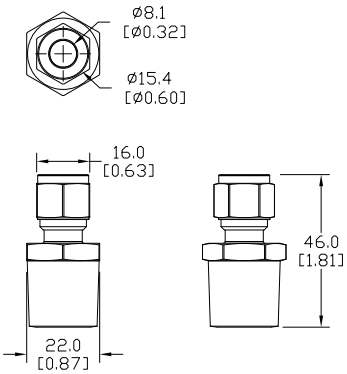

CF08-50N

See our website _____ for complete Engineering drawings.

Fitting Illustration

The CF compression fittings consist of four parts:

- 1. Screw fitting
- 2. First clamping ring
- 3. Second clamping ring
- 4. Coupling nut

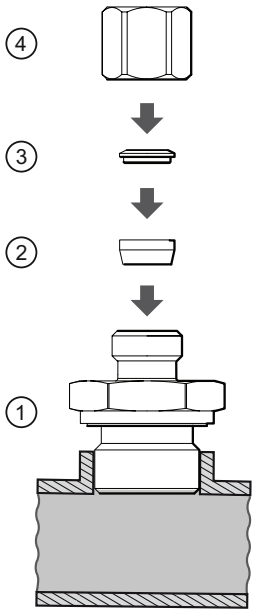

Note: Once the FTS series unit is inserted to the correct depth and the coupling nut is tightened down, the first and second clamping rings will be joined together, compressed onto to the FTS probe and cannot be removed without damaging the unit probe. The coupling nut however can be loosened after compressing allowing for the FTS probe, clamping rings and coupling nut to be removed for FTS probe cleaning.

FTS Series Liquid / Air Thermal Flow Sensors

Thermal Flow Meter Measuring Principle

Thermal dispersion or thermal flow sensing technology is based on the principle of heat transfer and relies on the cooling effect of a flowing fluid or gas to monitor flow rate. The tip of a thermal flow sensor probe typically contains two RTD temperature sensors and a heater element. One RTD sensor located on the inside cylindrical wall of the thermal flow sensor probe measures the temperature of the fluid or gas and is used as a reference temperature. The second RTD sensor is located in the end of the sensor probe with the heater element. Electrical power is applied to the heater element which raises the temperature measured by the second RTD sensor creating a temperature difference with the reference RTD sensor. As fluid or gas flows, heat will be carried away from the sensor probe tip. Faster flow will transfer more heat resulting in a smaller temperature difference between the two RTD sensors. Slower flow will transfer less heat resulting in a greater temperature difference between the two RTD sensors. The difference in temperature between the two RTD sensors is used to determine the velocity or flow rate of the fluid or gas flowing past the sensor probe.

Applications

- Liquid or gas flow or no flow detection
- Flow rate monitoring for process control
- Pump run dry protection
- Cooling water or air
- Relief valve monitoring
- Combustion air flow
- Compressed air flow

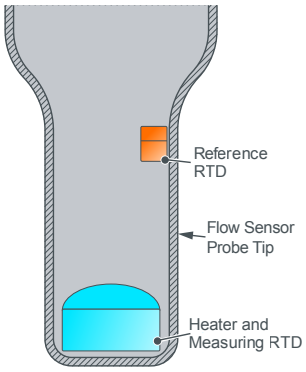

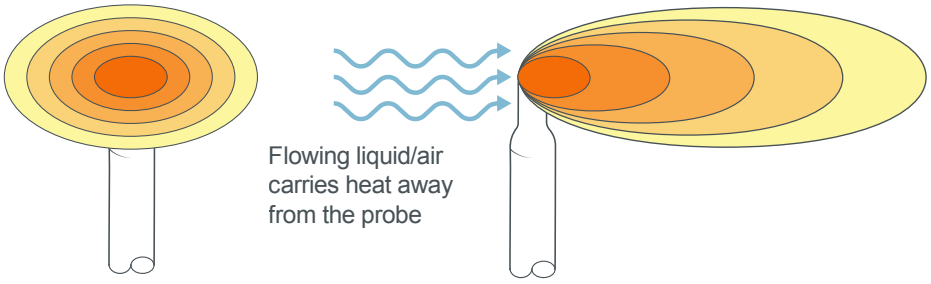

ProSense FTS Series Thermal Flow Sensors Selection Guide

Model	Price	Process Connection	Probe Length	Flow Range	Temperature Range	Display Units	Output 1	Output 2
FTS100-1001		None Use CF08-25N or CF08-50N for mounting (purchased separately)	100mm	Liquid: 0.15 to 9.85 ft/sec Air: 6 to 328 ft/sec	-4 to 212°F (-20 to 100°C)	5 x LED, green (fps, gpm, cfm, °F, 10^3) Switching status: 2 x LED, yellow Measured values: alphanumeric display, red/green 4-digit	Flow switch PNP/NPN, N.O./N.C. selectable or flow monitoring frequency signal	Flow / temp. switch PNP/NPN, N.O./N.C. selectable or flow / temp. monitoring 4-20 mA or frequency signal
FTS200-1001			200mm					
FTS100-1002			100mm			5 x LED, green (fps, gpm, cfm, °F, 10^3) Measured values: alphanumeric display, red/green 4-digit	Temp. monitoring 4-20 mA	Flow monitoring 4-20 mA
FTS200-1002			200mm					