P1AM-100 Arduino Compatible CPU

P1AM-100

The P1AM-100 is an Arduino-compatible CPU. It uses the Atmel SAMD21G18 microcontroller and can be programmed using Arduino IDE or ProductivityBlocks. It interfaces with all Productivity1000 Series I/O modules connected to the right side of the P1AM-100 and most Arduino MKR form factor shields connected to the left side. The specifications are listed in the tables below.

P1AM-100

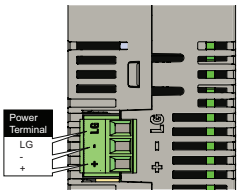

User Specifications

User Memory	256kB Flash with 10kB used for bootloader
Memory Type	Flash: 256kB, SRAM: 32kB
Base Controller and I/O Power Requirement [1]	24VDC ±2% Plan 0.5 W for the SAMD chip and base controller Plan 1.25 W per P1000 I/O module Plan 9W for max. header power draw (which provides max. 4.25 W power to left side connected shields)
Recommended Fuse (External)	Edison S5061-R, Time Delay, 1A Fuse For 9–15 modules: Edison S5062-R, Time Delay, 2A Fuse
Peripherals	MicroB USB, Arduino MKR-compatible, microSD card slot for data logging (32GB max), User controlled LED
Hardware Limits of System [2]	15 Productivity1000 I/O Modules; Arduino MKR shields
Programming	Programmed in C/C++ with the Arduino IDE or ProductivityBlocks

[1] If you do not use a Productivity1000 power supply, like the P1-01AC, then use a power supply that has transformer isolation. Use different 24VDC supplies for the CPU and inductive loads to keep the CPU power clean and free of voltage spikes caused by switching solenoids, motors and relay coils.
[2] See "MKR Expansion Bus Pins" table and notes for shield power budget restrictions.

General Specifications

Operating Temperature	0° to 60°C (32° to 140°F)
Storage Temperature	-20° to 70°C (-4° to 158°F)
Humidity	5 to 95% (non-condensing)
Environmental Air	No corrosive gases permitted
Vibration	IEC60068-2-6 (Test Fc)
Shock	IEC60068-2-27 (Test Ea)
Heat Dissipation	4000mW
Enclosure Type	Open Equipment
Module Location	Productivity1000 I/O modules connect on the right side of module. Productivity1000 power supply, P1AM Shields and MKR Shields connect on the left side on the module.
Weight	76g (2.8 oz)
Agency Approvals	UL 61010-1 and UL 61010-2-201 File E139594, Canada & USA; CE

CPU Status Indicators

PWR	Green LED is illuminated when power is ON
BASE	Green LED is illuminated when BASE controller is powered and has been initialized
LED	Yellow LED is illuminated when commanded by user program. LED can be referred to as LED_BUILTIN or Pin 32.

Toggle Switch Specifications

Switch can be read using the "digitalRead" function. Switch can be referred to as "SWITCH_BUILTIN" or Pin 31.

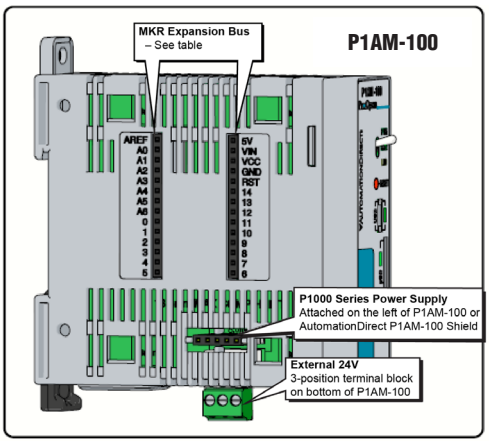

MKR Expansion Bus Pins

GPIO	A0–A6, 0–14
Analog Input Pins	A0–A6
Analog Output Pins	A0
PWM Pins	0–8, 10, A3, A4
Interrupt Pins	0, 1, 4–8, A1, A2
5V	5V supply output
Vin	5V regulated supply
VCC	3.3 V supply output
GND	Ground
RST	Reset
AREF	Analog Input Reference

Critical Notes:

Pins A3, A4, and 8–10 are used for the base controller.
Do not exceed 46mA combined from pins 0, 1, and 4–10.
Do not exceed 3.3 V on any I/O pin.
Do not exceed 7mA on any I/O pin.
Do not apply power to 5V or VCC

Productivity®Open Overview

ProductivityOpen leverages the modern processing power of Arduino and the proven industrial value of the Productivity1000 input and output modules. Make use of the wide variety of Arduino MKR form factor shields.

The P1AM-100 module is programmed with the Arduino IDE or ProductivityBlocks, an optional proprietary block programming environment.

Features

- Supports Productivity1000 inputs and outputs modules
- Supports Arduino MKR form factor shields
- UL listed CPU
- UL listed ProductivityOpen branded shields

Productivity®Open Modules		
Part Number	**Price**	**Description**
P1AM-100		Arduino compatible CPU
P1AM-ETH		Ethernet shield
P1AM-GPIO		Extended I/O shield
P1AM-PROTO		Custom housing kit
P1AM-START1		Maker community start kit
P1AM-START2		Industrial community start kit

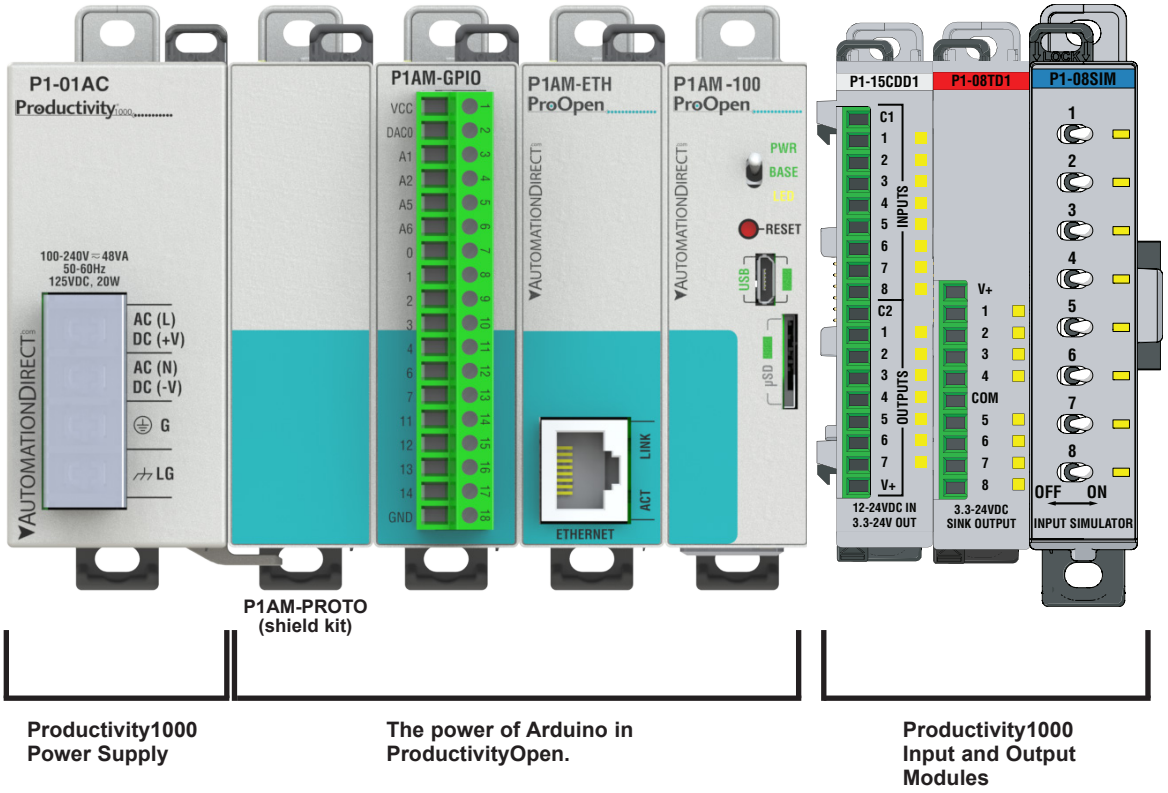

Productivity®Open Overview

Productivity1000 I/O Modules

A variety of discrete and analog I/O modules from our Productivity1000 line are available for use with the P1AM-100.

Productivity1000 Modules			
Part Number	**Number of Inputs**		**Description**
Input Modules			
P1-08SIM	8		Input Simulator Module
P1-08ND3	8		Sinking/Sourcing 12–24 VDC Input
P1-16ND3	16		Sinking/Sourcing 12–24 VDC Input
P1-08NE3	8		Sinking/Sourcing 24V AC/DC
P1-16NE3	16		Sinking/Sourcing 24V AC/DC
P1-08NA	8		AC Isolated 100–240 VAC
Output Modules			
	Number of Outputs		
P1-08TD1	8		Sinking DC Output
P1-08TD2	8		Sourcing DC Output
P1-15TD1	15		Sinking DC Output
P1-15TD2	15		Sourcing DC Output
P1-08TA	8		AC Output
P1-08TRS	8		Isolated Relay Output
P1-16TR	16		Relay Output
Input/Output Modules			
	Inputs	**Outputs**	
P1-15CDD1	8	7	Input: Sinking/Sourcing; Output: Sinking
P1-15CDD2	8	7	Input: Sinking/Sourcing; Output: Sourcing
P1-16CDR	8	8	Input: Sinking/Sourcing; Output: Relay
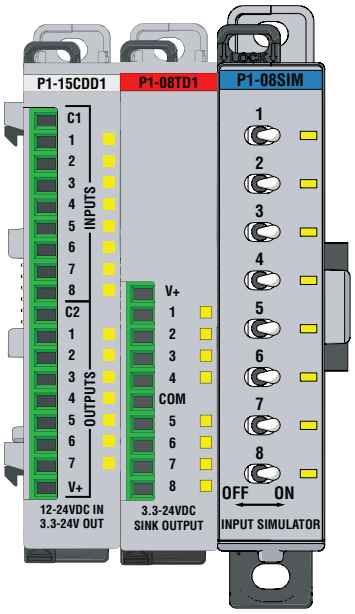
Productivity1000 Modules			
Part Number	**Number of Inputs**		**Description**
Input Modules			
P1-04AD	4		Analog Input (Current)
P1-04ADL-1	4		Analog Input (Current)
P1-04ADL-2	4		Analog Input (Voltage)
P1-08ADL-1	8		Analog Input (Current)
P1-08ADL-2	8		Analog Input (Voltage)
P1-04RTD	4		RTD Input
P1-04THM	4		Analog Thermocouple Input
P1-04NTC	4		Analog Thermistor Input
Output Modules			
	Number of Outputs		
P1-04DAL-1	4		Analog Output (Current)
P1-04DAL-2	4		Analog Output (Voltage)
P1-08DAL-1	8		Analog Output (Current)
P1-08DAL-2	8		Analog Output (Voltage)
Input/Output Modules			
	Inputs	**Outputs**	
P1-4ADL2DAL-1	4	2	Analog Input/Analog Output (Current)
P1-4ADL2DAL-2	4	2	Analog Input/Analog Output (Voltage)