DC Output Modules

P2-15TD2

Sourcing Output
The P2-15TD2 DC Output Module provides fifteen outputs that source up to 1A per output from 12–24 VDC supplies.

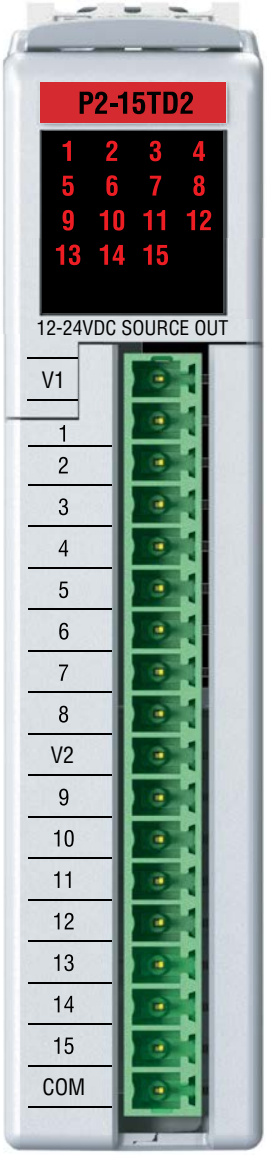

Terminal block sold separately

Output Specifications	
Outputs per Module	15 sourcing
Output Type	P-channel MOSFET, open source
Rated Voltage	12–24 VDC
Operating Voltage Range	10.2–28.8 VDC
Maximum Output Current	1A per point / 8A per common
Minimum Load Current	1mA
Maximum Leakage Current	0.3 mA @ 28.8 VDC
On Voltage Drop	0.18 VDC @ 1A
Maximum Inrush Current	4A for 40ms, 6A for 10ms
OFF to ON Response	≤0.5 ms
ON to OFF Response	≤0.5 ms
Status Indicators	Logic Side (15 points)
Commons	1
Fuses	None
External Power Supply Required	12–24 VDC (-15% / +20%) @ 22mA

General Specifications	
Operating Temperature	0° to 60°C (32° to 140°F)
Storage Temperature	-20° to 70°C (-4° to 158°F)
Humidity	5 to 95% (non-condensing)
Environmental Air	No corrosive gases permitted
Vibration	IEC60068-2-6 (Test Fc)
Shock	IEC60068-2-27 (Test Ea)
Field to Logic Side Isolation	1800VAC applied for 1 second
Insulation Resistance	>10MΩ @ 500VDC
Heat Dissipation	2600mW
Enclosure Type	Open equipment
Module Keying to Backplane	Electronic
Module Location	Any I/O slot in any Productivity2000 system.
Field Wiring	Use ZIPLink wiring system or removable terminal block (not included). See Wiring Solutions.
Connector Type (Sold separately)	18 Position, removable terminal block
Weight	100g (3.5 oz)
Agency Approvals*	UL 61010-2-201 file E139594, Canada & USA CE (EN61131-2*, EMC, EN 61010-1 and SAFETY: EN61010-2-201)

**Meets EMC and Safety requirements. See the Declaration of Conformity for details.*
***To obtain the most current agency approval information, see the Agency Approval Checklist section on the specific component part number web page.*

NOTE: The most recent Productivity Suite software and firmware versions may be required to support new modules and new features.

We recommend using prewired ZIPLink cables and connection modules. See Wiring Solutions.
If you wish to hand-wire your module, a removable terminal block is sold separately. Order part number P2-RTB or P2-RTB-1.

DC Output Modules

P2-15TD2 (cont'd)

Removable Terminal Block Specifications		
Part Number	***P2-RTB***	***P2-RTB-1***
Number of positions	18 screw terminals	18 push release terminals
Wire Range	30–16 AWG (0.051–1.31 mm²) Solid/stranded conductor 3/64 in (1.2 mm) insulation max. 1/4 in (6–7 mm) strip length	28–16 AWG (0.081–1.31 mm²) Solid/stranded conductor 3/64 in (1.2 mm) insulation max. 19/64 in (7–8 mm) strip length
Conductors	USE COPPER CONDUCTORS, 75ºC or equivalent.	
Screw Driver Width	0.1 in. (2.5 mm) maximum	NA
Screw Size	M2	N/A
Screw Torque	2.5 lb·in (0.28 N·m)	N/A

** Recommended screw driver: P/N TW-SD-MSL-1.*

Wiring Diagrams

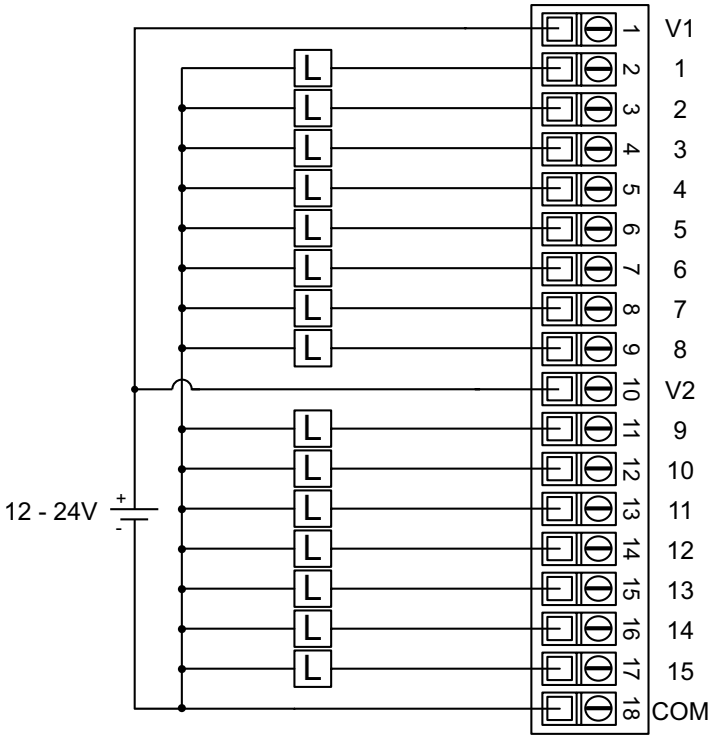

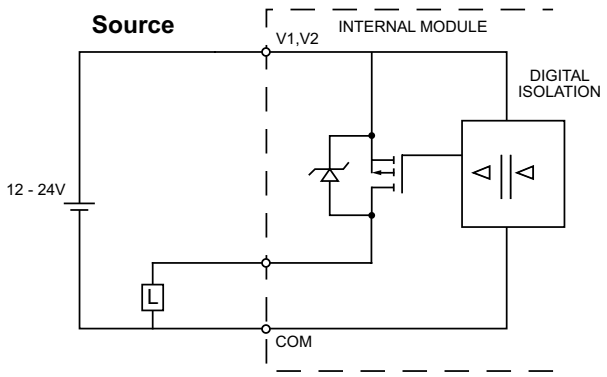

Wiring Solutions

Wiring Solutions using the ZIPLink wiring system

ZIPLinks eliminate the normally tedious process of wiring between devices by utilizing prewired cables and DIN rail mount connector modules. It's as simple as plugging in a cable connector at either end and terminating wires at only one end. Prewired cables keep installation clean and efficient, using half the space at a fraction of the cost of standard terminal blocks. There are several wiring solutions available when using the ZIPLink System ranging from CPU I/O-to-ZIPLink Connector Modules that are ready for field termination, options for connecting to third party devices, GS Series, DuraPulse and SureServo Drives, and specialty relay, transorb and communications modules. Pre-printed I/O-specific adhesive label strips for quick marking of ZIPLink modules are provided with ZIPLink cables. See the following solutions to help determine the best ZIPLink system for your application.

Solution 1: DirectLOGIC, CLICK, Productivity® 1000, Productivity® 2000 and Productivity3000® I/O Modules to ZIPLink Connector Modules

When looking for quick and easy I/O-to-field termination, a ZIPLink connector module used in conjunction with a prewired ZIPLink cable, consisting of an I/O terminal block at one end and a multi-pin connector at the other end, is the best solution.

Use the CPU I/O Modules to ZIPLink Connector Modules selector tables located in the ZIPLink Wiring Solutions section to:

1. Locate your I/O module/CPU,
2. Select a ZIPLink Module, and
3. Select a corresponding ZIPLink Cable.

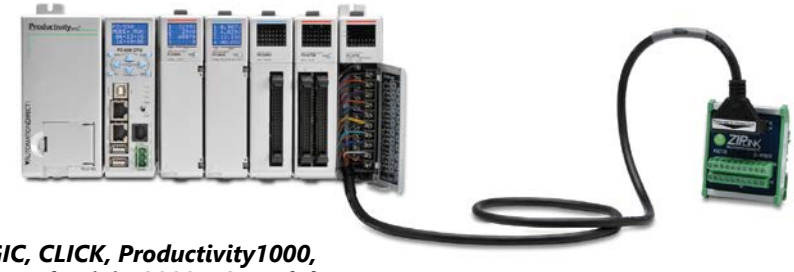

Solution 2: DirectLOGIC, CLICK, Productivity1000, Productivity2000 and Productivity3000 I/O Modules to 3rd Party Devices

When wanting to connect I/O to another device within close proximity of the I/O modules, no extra terminal blocks are necessary when using the ZIPLink Pigtail Cables. ZIPLink Pigtail Cables are prewired to an I/O terminal block with color-coded pigtail with soldered-tip wires on the other end.

Use the I/O Modules to 3rd Party Devices selector tables located in the ZIPLink Wiring Solutions section to:

1. Locate your CPU I/O module, and
2. Select a ZIPLink Pigtail Cable that is compatible with your 3rd party device.

Solution 3: GS Series and DuraPulse Drives Communication Cables

Need to communicate via Modbus RTU to a drive or a network of drives?

ZIPLink cables are available in a wide range of configurations for connecting to CPUs, SureServo, SureStep, Stellar Soft Starter and AC drives. Add a ZIPLink communications module to quickly and easily set up a multi-device network.

Use the Drives Communication selector tables located in the ZIPLink Wiring Solutions section to:

1. Locate your Drive and type of communications, and
2. Select a ZIPLink cable and other associated hardware.

Wiring Solutions

Solution 4: Serial Communications Cables

ZIPLink offers communications cables for use with DirectLOGIC, CLICK, Productivity1000, Productivity2000 and Productivity3000 CPUs, that can also be used with other communications devices. Connections include a 6-pin RJ12 or 9-pin, 15-pin and 25-pin D-Sub connectors which can be used in conjunction with the RJ12 or D-Sub Feedthrough modules.

Using the Serial Communications Cables selector table located in the ZIPLink Wiring Solutions section,

1. Locate your connector type
2. Select a cable.

Solution 5: Specialty ZIPLink Modules

For additional application solutions, ZIPLink Specialty Modules are available in a variety of configurations including stand-alone relays, 24VDC and 120VAC transorb modules, D-Sub, RJ12 and RJ45 feedthrough modules, communication port adapter and distribution modules, and SureServo 50-pin I/O interface connection.

Using the ZIPLink Specialty Modules selector table located in the ZIPLink Wiring Solutions section:

1. Locate the type of application.
2. Select a ZIPLink module.

Solution 6: ZIPLink Connector Modules to 3rd Party Devices

If you need a way to connect your device to terminal blocks without all that wiring time, then our pigtail cables with color-coded soldered-tip wires are a good solution. Used in conjunction with any compatible ZIPLink Connector Modules, a pigtail cable keeps wiring clean and easy and reduces troubleshooting time.

Use the Universal Connector Modules and Pigtail Cables table located in the ZIPLink Wiring Solutions section to:

1. Select module type,
2. Select the number of pins
3. Select cable.

I/O Modules to ZIPLink Connector Modules - Productivity2000

Discrete Input Modules

Productivity2000 Input Module ZIPLink Selector

I/O Input Module	ZIPLink Parameters			
	# of Terms	Component	Part No.	Cable Part No.
P2-08ND3-1	18	Feedthrough	ZL-RTB20 (-1)	ZL-P2-CBL18 *
P2-16ND3-1	18	Sensor/LED	ZL-LTB16-24-1	
P2-16ND-TTL	18	Feedthrough	ZL-RTB20 (-1)	
P2-08NE3				
P2-16NE3				
P2-32ND3-1	40	Feedthrough	ZL-RTB40 (-1)	ZL-CBL40 *
		Sensor/LED	ZL-LTB16-24-1	
P2-32NE3	40	Feedthrough	ZL-RTB40 (-1)	
P2-08NAS	8	Feedthrough	ZL-RTB20 (-1)	ZL-P2-CBL18 *
P2-16NA	18			

Specialty Modules

Productivity2000 Specialty & Motion Modules ZIPLink Selector

I/O Module	ZIPLink Parameters			
	# of Terms	Component	Part No.	Cable Part No.
P2-HSI	40	Feedthrough	ZL-RTB40 (-1)	ZL-CBL40-S ZL-CBL40-1S ZL-CBL40-2S
P2-HSO				
P2-02HSC	See Note 1			
P2-04PWM	18	Feedthrough	ZL-RTB20 (-1)	ZL-P2-CBL18 *
P2-08SIM	See Note 1			
P2-SCM	See Note 1			

Discrete Output Modules

Productivity2000 Output Module ZIPLink Selector

I/O Output Module	ZIPLink Parameters			
	# of Terms	Component	Part No.	Cable Part No.
P2-08TD1S	8	Feedthrough	ZL-RTB20 (-1)	ZL-P2-CBL18 *
P2-08TD2S	8			
P2-15TD1	15			
P2-15TD2	15			
P2-08TD1P	18			
P2-16TD-TTL	18			
P2-08TD2P	18			
P2-08TRS	18			
P2-08TAS	18			
P2-16TA	18	Feedthrough	ZL-RTB20 (-1)	
		Fuse	ZL-RFU20 [2]	
P2-16TD1P	18	Feedthrough	ZL-RTB20 (-1)	
		Relay (Sinking)	ZL-RRL16-24-1 ZL-RRL16W-24-1 ZL-RRL16F-24-1 ZL-RRL16HDF-24-1	
P2-16TD2P	18	Feedthrough	ZL-RTB20 (-1)	
		Relay (Sourcing)	ZL-RRL16-24-2 ZL-RRL16W-24-2 ZL-RRL16F-24-2 ZL-RRL16HDF-24-2	
P2-32TD1P	32	Feedthrough	ZL-RTB40 (-1)	ZL-CBL40 *
P2-32TD2P	32			
P2-16TR	18	Feedthrough	ZL-RTB20 (-1)	ZL-P2-CBL18 *
		Fuse	ZL-RFU20 [2]	

** Select the cable length by replacing the * with: Blank = 0.5 m, -1 = 1.0 m, or -2 = 2.0 m.*
1. These modules are not supported by the ZIPLink wiring system
2. Note: Fuses (5 x 20 mm) are not included. See Edison Electronic Fuse section for (5 x 20 mm) fuse. S500 and GMA electronic circuit protection for fast-acting maximum protection. S506 and GMC electronic circuit protection for time-delay performance. Ideal for inductive circuits.
To ensure proper operation, do not exceed the voltage and current rating of ZIPLink module. ZL-RFU20 = 2A per circuit; ZL-RFU40 = 400 mA per circuit.

I/O Modules to *ZIP*Link Connector Modules - Productivity2000

Analog Input Modules

Productivity2000 Analog Input Module ZIPLink Selector				
I/O Analog Module	***ZIPLink Parameters***			
	# of Terms	Component	Part No.	Cable Part No.
P2-04AD	18	Feedthrough	ZL-RTB20 (-1)	ZL-P2-CBL18 *
P2-04AD-1				
P2-04AD-2				
P2-08AD-1				
P2-08AD-2				
P2-08ADL-1				
P2-08ADL-2				
P2-16AD-1	24			ZL-P2-CBL24 *
P2-16AD-2				
P2-16ADL-1				
P2-16ADL-2				
P2-06RTD	Matched Only	See Note 1		
P2-08THM	T/C Wire Only	See Note 1		
P2-08NTC	Copper Conductors	See Note 1		

** Select the cable length by replacing the * with: Blank = 0.5 m, -1 = 1.0 m, or -2 = 2.0 m.*
1. These modules are not supported by the ZIPLink wiring system.

Analog Output Modules

Productivity2000 Analog Output Module ZIPLink Selector				
I/O Analog Module	***ZIPLink Parameters***			
	# of Terms	Component	Part No.	Cable Part No.
P2-04DA	18	Feedthrough	ZL-RTB20 (-1)	ZL-P2-CBL18 *
P2-04DA-1				
P2-04DA-2				
P2-04DAL-1				
P2-04DAL-2				
P2-08DA-1				
P2-08DA-2				
P2-08DAL-1				
P2-08DAL-2				
P2-16DA-1	24			ZL-P2-CBL24 *
P2-16DA-2				
P2-16DAL-1				
P2-16DAL-2				
P2-8AD4DA-1	18			ZL-P2-CBL18 *
P2-8AD4DA-2				

I/O Modules

A variety of discrete, analog and specialty I/O modules are available for use in a Productivity2000 system. Specifications for each module are on the following pages.

A filler module is available for unused I/O module slots (part number P2-FILL).

Discrete Input Modules

Productivity2000 Discrete Input Modules			
Part Number	**Number of Inputs**	**Description**	**Price**
P2-08SIM	8	Input Simulator Module	
P2-08ND3-1	8	Sinking/Sourcing 12–24 VDC	
P2-16ND-TTL	16	Sinking/Sourcing	
P2-16ND3-1	16	Sinking/Sourcing 24V AC/DC	
P2-32ND3-1	32	Sinking/Sourcing 12–24 VDC	
P2-08NE3	8	Sinking/Sourcing 24V AC/DC	
P2-16NE3	16	Sinking/Sourcing 12–24 VDC	
P2-32NE3	32	Sinking/Sourcing 24V AC/DC	
P2-08NAS	8	AC Isolated 100-120 VAC	
P2-16NA	16	AC 100-240 VAC	

Specialty Modules

Productivity2000 Specialty Modules			
Part Number	**Number of Channels**	**Description**	**Price**
P2-HSI	2	High-Speed Input	
P2-HSO**	2	High-Speed Output	
P2-02HSC	2	High-Speed Counter	
P2-04PWM	4	Pulse-Width Modulation	
P2-SCM	4 ports	Serial Communications Module	

*** ZIPLink required.*

Analog Output Modules

Productivity2000 Analog Output Modules			
Part Number	**Number of Channels**	**Description**	**Price**
P2-04DA	4	Analog Output (Voltage/Current)	
P2-04DA-1	4	Analog Output (Current)	
P2-04DA-2	4	Analog Output (Voltage)	
P2-04DAL-1*	4	Analog Output (Current)	
P2-04DAL-2*	4	Analog Output (Voltage)	
P2-08DA-1	8	Analog Output (Current)	
P2-08DA-2	8	Analog Output (Voltage)	
P2-08DAL-1*	8	Analog Output (Current)	
P2-08DAL-2*	8	Analog Output (Voltage)	
P2-16DA-1	16	Analog Output (Current)	
P2-16DA-2	16	Analog Output (Voltage)	
P2-16DAL-1*	16	Analog Output (Current)	
P2-16DAL-2*	16	Analog Output (Voltage)	

** Low resolution analog modules without OLED display.*

Discrete Output Modules

Productivity2000 Discrete Output Modules			
Part Number	**Number of Outputs**	**Description**	**Price**
P2-08TD1S	8	Isolated Sinking	
P2-08TD2S	8	Isolated Sourcing	
P2-15TD1	15	Sinking	
P2-15TD2	15	Sourcing	
P2-08TD1P	8	Sinking Protected	
P2-08TD2P	8	Sourcing Protected	
P2-16TD-TTL	16	Sourcing	
P2-16TD1P	16	Sinking Protected	
P2-16TD2P	16	Sourcing Protected	
P2-32TD1P	32	Sinking Protected	
P2-32TD2P	32	Sourcing Protected	
P2-08TAS	8	Isolated AC	
P2-16TA	16	100-240 VAC Output	
P2-06TRS	6	Isolated Relay	
P2-08TRS	8	Isolated Relay	
P2-16TR	16	Relay	

Analog Input Modules

Productivity2000 Analog Input Modules			
Part Number	**Number of Channels**	**Description**	**Price**
P2-04AD	4	Analog Input (Voltage/Current)	
P2-04AD-1	4	Analog Input (Current)	
P2-04AD-2	4	Analog Input (Voltage)	
P2-08AD-1	8	Analog Input (Current)	
P2-08AD-2	8	Analog Input (Voltage)	
P2-08ADL-1*	8	Analog Input (Current)	
P2-08ADL-2*	8	Analog Input (Voltage)	
P2-16AD-1	16	Analog Input (Current)	
P2-16AD-2	16	Analog Input (Voltage)	
P2-16ADL-1*	16	Analog Input (Current)	
P2-16ADL-2*	16	Analog Input (Voltage)	
P2-06RTD	6	Analog RTD Input	
P2-08NTC	8	Analog Thermocouple Input	
P2-08THM	8	Analog Thermistor Input	

Productivity2000 Analog Input/Output Modules			
Part Number	**Number of Channels**	**Description**	**Price**
P2-8AD4DA-1	8/4	Analog Input/Output (Current)	
P2-8AD4DA-2	8/4	Analog Input/Output (Voltage)	

I/O Module Installation Procedure

WARNING: ***DO NOT APPLY FIELD POWER UNTIL THE FOLLOWING STEPS ARE COMPLETED. SEE HOT-SWAP PROCEDURE FOR EXCEPTIONS.***

Step One: Align module catch with base slot and module into connector.

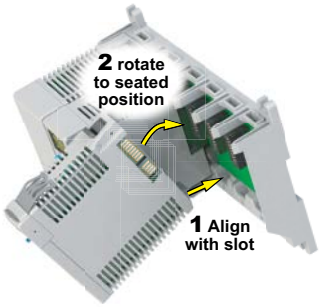

Step Two: Pull top locking tab toward module face. Click indicates lock is en- gaged.

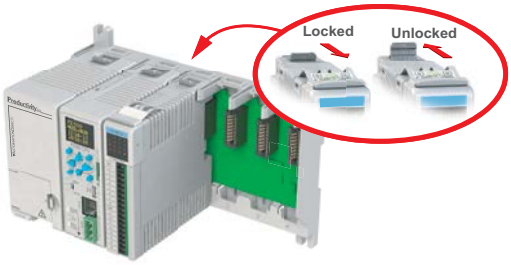

Step Three: Attach field wiring using removable terminal block or ZIPLink wiring system.

WARNING: ***EXPLOSION HAZARD – DO NOT CONNECT OR DISCONNECT CONNECTORS OR OPERATE SWITCHES WHILE CIRCUIT IS LIVE UNLESS THE AREA IS KNOWN TO BE NON-HAZARDOUS. DO NOT HOT-SWAP MODULES UNLESS THE AREA IS KNOWN TO BE NON-HAZARDOUS.***