# Analog Output Modules

## P2-16DA-2

***Voltage Analog Output***
The P2-16DA-2 Voltage Analog Output Module provides sixteen channels of ±10 VDC outputs.

**No terminal block sold for this module; ZIPLink required.**

**We recommend using pre-wired ZIPLink cables and connection modules. See Wiring Solutions. Module connector type is a 24-pin Molex Style 43025-2400.**

| Output Specifications | |
|---|---|
| ***Output Channels*** | 16 |
| ***Module Signal Output Range*** | ±10VDC |
| ***Output Signal Resolution*** | 16-bit |
| ***Resolution Value of LSB (least significant bit)*** | ±10VDC = 305µV/count<br>1 LSB = 1 count |
| ***Data Range*** | -32768 to 32767 counts |
| ***Output Type (sourcing/sinking)*** | Voltage: 10mA max current |
| ***Output Value in Fault Mode*** | 0V |
| ***Load Impedance*** | ≥1000Ω |
| ***Maximum Capacitive Load*** | 0.01 µF maximum |
| ***Allowed Load Type*** | Grounded |
| ***Maximum Inaccuracy*** | 0.1% of range<br>(including temperature drift) |
| ***Maximum Full Scale Calibration Error (not including offset error)*** | ±0.025% of range maximum |
| ***Maximum Offset Calibration Error*** | ±0.025% of range maximum |
| ***Accuracy vs. Temperature*** | ±25PPM/°C max full scale calibration change<br>(±0.0025% of range/°C) |
| ***Max Crosstalk*** | -96dB, 1 LSB |
| ***Linearity Error (End to End)*** | ±16 LSB maximum (±0.025% of full scale)<br>Monotonic with no missing codes |
| ***Output Stability and Repeatability*** | ±10 LSB after 10 minute warm-up (typical) |
| ***Output Ripple*** | 0.05% of full scale |
| ***Output Setting Time*** | 300µs max, 5µs min (full scale change) |
| ***All Channel Update Rate*** | 3ms |
| ***Maximum Continuous Overload*** | Outputs current limited to 40mA typical.<br>Continuous overloads on multiple output can damage the module. |
| ***Type of Output Protection*** | 0.1 µF Transient Suppressor |
| ***External DC Power Required*** | 24VDC (-20% / +25%), 265mA |

| General Specifications | |
|---|---|
| ***Operating Temperature*** | 0º to 60ºC (32º to 140ºF) |
| ***Storage Temperature*** | -20º to 70ºC (-4º to 158ºF) |
| ***Humidity*** | 5 to 95% (non-condensing) |
| ***Environmental Air*** | No corrosive gases permitted |
| ***Vibration*** | IEC60068-2-6 (Test Fc) |
| ***Shock*** | IEC60068-2-27 (Test Ea) |
| ***Field to Logic Side Isolation*** | 1800VAC applied for 1 second |
| ***Insulation Resistance*** | >10MΩ @ 500VDC |
| ***Heat Dissipation*** | 6.4 W |
| ***Enclosure Type*** | Open equipment |
| ***Module Keying to Backplane*** | Electronic |
| ***Module Location*** | Any I/O slot in a Productivity2000 system |
| ***Field Wiring*** | Use ZIPLink wiring system ONLY. See Wiring Solutions. Must use copper conductors 75ºC or equivalent. |
| ***Connector Type*** | 24-Pin Molex Style 43025-2400 |
| ***Weight*** | 90g (3.2 oz) |
| ***Agency Approvals***** | UL508 File E139594, Canada & USA<br>CE (EN61131-2*) |

**Meets EMC and Safety requirements. See the Declaration of Conformity for details.*
***To obtain the most current agency approval information, see the Agency Approval Checklist section on the specific component part number web page.*

| Connector Specifications | |
|---|---|
| ***Connector Type*** | 24-Pin Molex Style 43025-2400 |
| ***Number of Pins*** | 24 |
| ***Pin Spacing*** | 3x3 mm (0.118 x 0.118 in) |

# Analog Output Modules

## P2-16DA-2 Wiring Diagrams

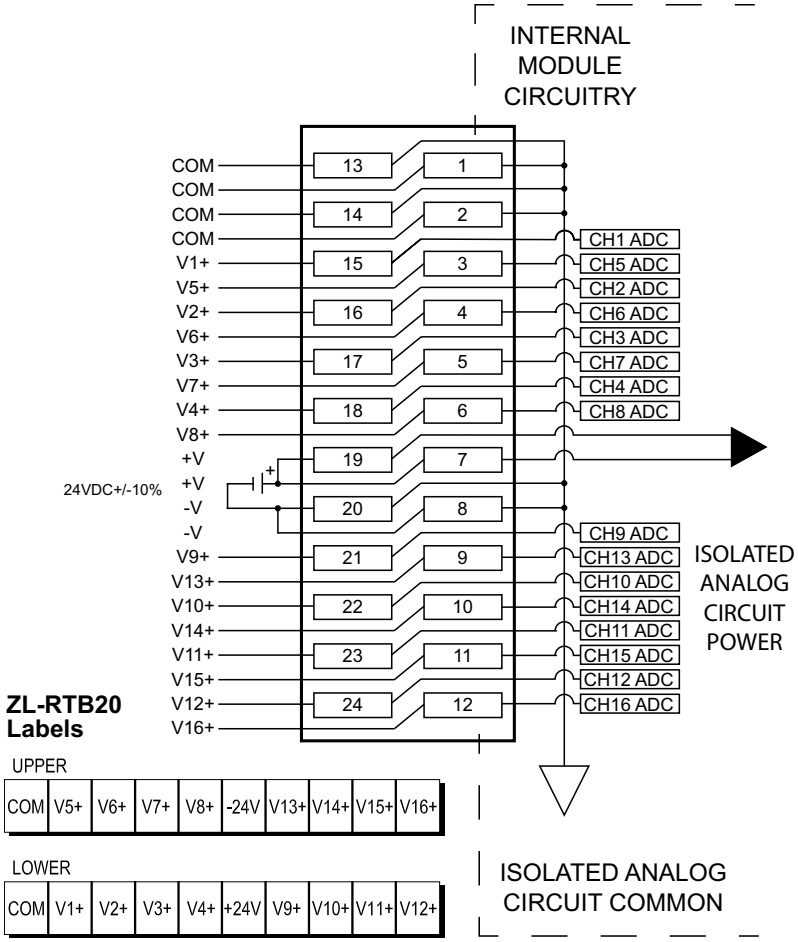


**Voltage Output Circuits**

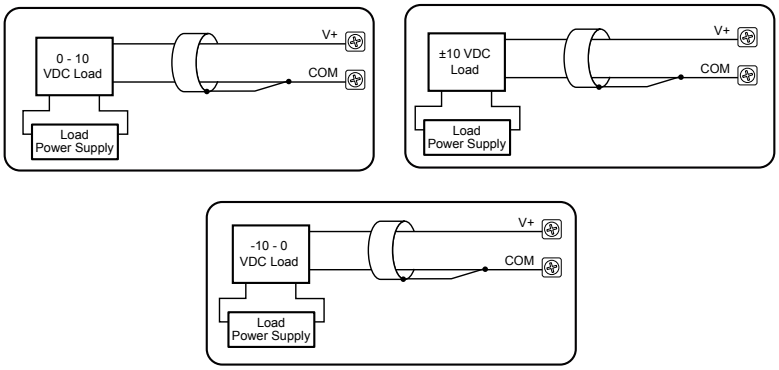

# Wiring Solutions

## Wiring Solutions using the ZIPLink wiring system

ZIPLinks eliminate the normally tedious process of wiring between devices by utilizing prewired cables and DIN rail mount connector modules. It's as simple as plugging in a cable connector at either end and terminating wires at only one end. Prewired cables keep installation clean and efficient, using half the space at a fraction of the cost of standard terminal blocks. There are several wiring solutions available when using the ZIPLink System ranging from CPU I/O-to-ZIPLink Connector Modules that are ready for field termination, options for connecting to third party devices, GS Series, DuraPulse and SureServo Drives, and specialty relay, transorb and communications modules. Pre-printed I/O-specific adhesive label strips for quick marking of ZIPLink modules are provided with ZIPLink cables. See the following solutions to help determine the best ZIPLink system for your application.

***Solution 1: DirectLOGIC, CLICK, Productivity® 1000, Productivity® 2000 and Productivity3000® I/O Modules to ZIPLink Connector Modules***

When looking for quick and easy I/O-to-field termination, a ZIPLink connector module used in conjunction with a prewired ZIPLink cable, consisting of an I/O terminal block at one end and a multi-pin connector at the other end, is the best solution.

Use the CPU I/O Modules to ZIPLink Connector Modules selector tables located in the ZIPLink Wiring Solutions section to:

1. Locate your I/O module/CPU,
2. Select a ZIPLink Module, and
3. Select a corresponding ZIPLink Cable.

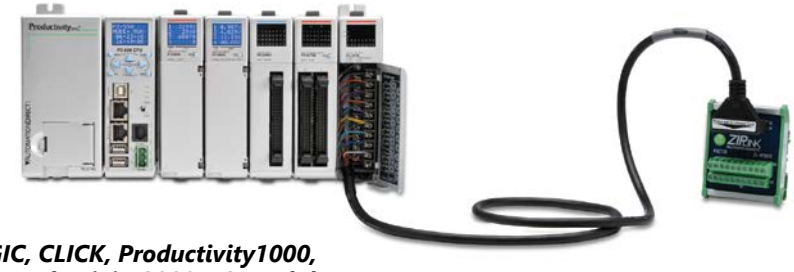

***Solution 2: DirectLOGIC, CLICK, Productivity1000, Productivity2000 and Productivity3000 I/O Modules to 3rd Party Devices***

When wanting to connect I/O to another device within close proximity of the I/O modules, no extra terminal blocks are necessary when using the ZIPLink Pigtail Cables. ZIPLink Pigtail Cables are prewired to an I/O terminal block with color-coded pigtail with soldered-tip wires on the other end.

Use the I/O Modules to 3rd Party Devices selector tables located in the ZIPLink Wiring Solutions section to:

1. Locate your CPU I/O module, and
2. Select a ZIPLink Pigtail Cable that is compatible with your 3rd party device.

***Solution 3: GS Series and DuraPulse Drives Communication Cables***

Need to communicate via Modbus RTU to a drive or a network of drives?

ZIPLink cables are available in a wide range of configurations for connecting to CPUs, SureServo, SureStep, Stellar Soft Starter and AC drives. Add a ZIPLink communications module to quickly and easily set up a multi-device network.

Use the Drives Communication selector tables located in the ZIPLink Wiring Solutions section to:

1. Locate your Drive and type of communications, and
2. Select a ZIPLink cable and other associated hardware.

# Wiring Solutions

***Solution 4: Serial Communications Cables***

ZIPLink offers communications cables for use with DirectLOGIC, CLICK, Productivity1000, Productivity2000 and Productivity3000 CPUs, that can also be used with other communications devices. Connections include a 6-pin RJ12 or 9-pin, 15-pin and 25-pin D-Sub connectors which can be used in conjunction with the RJ12 or D-Sub Feedthrough modules.

Using the Serial Communications Cables selector table located in the ZIPLink Wiring Solutions section,

1. Locate your connector type
2. Select a cable.

***Solution 5: Specialty ZIPLink Modules***

For additional application solutions, ZIPLink Specialty Modules are available in a variety of configurations including stand-alone relays, 24VDC and 120VAC transorb modules, D-Sub, RJ12 and RJ45 feedthrough modules, communication port adapter and distribution modules, and SureServo 50-pin I/O interface connection.

Using the ZIPLink Specialty Modules selector table located in the ZIPLink Wiring Solutions section:

1. Locate the type of application.
2. Select a ZIPLink module.

***Solution 6: ZIPLink Connector Modules to 3rd Party Devices***

If you need a way to connect your device to terminal blocks without all that wiring time, then our pigtail cables with color-coded soldered-tip wires are a good solution. Used in conjunction with any compatible ZIPLink Connector Modules, a pigtail cable keeps wiring clean and easy and reduces troubleshooting time.

Use the Universal Connector Modules and Pigtail Cables table located in the ZIPLink Wiring Solutions section to:

1. Select module type,
2. Select the number of pins
3. Select cable.

# I/O Modules to ZIPLink Connector Modules - Productivity2000

## Discrete Input Modules

**Productivity2000 Input Module ZIPLink Selector**

| I/O Input Module | ZIPLink Parameters | | | |
|---|---|---|---|---|
| | # of Terms | Component | Part No. | Cable Part No. |
| P2-08ND3-1 | 18 | Feedthrough | ZL-RTB20 (-1) | ZL-P2-CBL18 * |
| P2-16ND3-1 | 18 | Sensor/LED | ZL-LTB16-24-1 | |
| P2-16ND-TTL | 18 | Feedthrough | ZL-RTB20 (-1) | |
| P2-08NE3 | | | | |
| P2-16NE3 | | | | |
| P2-32ND3-1 | 40 | Feedthrough | ZL-RTB40 (-1) | ZL-CBL40 * |
| | | Sensor/LED | ZL-LTB16-24-1 | |
| P2-32NE3 | 40 | Feedthrough | ZL-RTB40 (-1) | |
| P2-08NAS | 8 | Feedthrough | ZL-RTB20 (-1) | ZL-P2-CBL18 * |
| P2-16NA | 18 | | | |

## Specialty Modules

**Productivity2000 Specialty & Motion Modules ZIPLink Selector**

| I/O Module | ZIPLink Parameters | | | |
|---|---|---|---|---|
| | # of Terms | Component | Part No. | Cable Part No. |
| P2-HSI | 40 | Feedthrough | ZL-RTB40 (-1) | ZL-CBL40-S<br>ZL-CBL40-1S<br>ZL-CBL40-2S |
| P2-HSO | | | | |
| P2-02HSC | See Note 1 | | | |
| P2-04PWM | 18 | Feedthrough | ZL-RTB20 (-1) | ZL-P2-CBL18 * |
| P2-08SIM | See Note 1 | | | |
| P2-SCM | See Note 1 | | | |

## Discrete Output Modules

**Productivity2000 Output Module ZIPLink Selector**

| I/O Output Module | ZIPLink Parameters | | | |
|---|---|---|---|---|
| | # of Terms | Component | Part No. | Cable Part No. |
| P2-08TD1S | 8 | Feedthrough | ZL-RTB20 (-1) | ZL-P2-CBL18 * |
| P2-08TD2S | 8 | | | |
| P2-15TD1 | 15 | | | |
| P2-15TD2 | 15 | | | |
| P2-08TD1P | 18 | | | |
| P2-16TD-TTL | 18 | | | |
| P2-08TD2P | 18 | | | |
| P2-08TRS | 18 | | | |
| P2-08TAS | 18 | | | |
| P2-16TA | 18 | Feedthrough | ZL-RTB20 (-1) | |
| | | Fuse | ZL-RFU20 [2] | |
| P2-16TD1P | 18 | Feedthrough | ZL-RTB20 (-1) | |
| | | Relay (Sinking) | ZL-RRL16-24-1<br>ZL-RRL16W-24-1<br>ZL-RRL16F-24-1<br>ZL-RRL16HDF-24-1 | |
| P2-16TD2P | 18 | Feedthrough | ZL-RTB20 (-1) | |
| | | Relay (Sourcing) | ZL-RRL16-24-2<br>ZL-RRL16W-24-2<br>ZL-RRL16F-24-2<br>ZL-RRL16HDF-24-2 | |
| P2-32TD1P | 32 | Feedthrough | ZL-RTB40 (-1) | ZL-CBL40 * |
| P2-32TD2P | 32 | | | |
| P2-16TR | 18 | Feedthrough | ZL-RTB20 (-1) | ZL-P2-CBL18 * |
| | | Fuse | ZL-RFU20 [2] | |

** Select the cable length by replacing the * with: Blank = 0.5 m, -1 = 1.0 m, or -2 = 2.0 m.*
*1. These modules are not supported by the ZIPLink wiring system*
*2. Note: Fuses (5 x 20 mm) are not included. See Edison Electronic Fuse section for (5 x 20 mm) fuse. S500 and GMA electronic circuit protection for fast-acting maximum protection. S506 and GMC electronic circuit protection for time-delay performance. Ideal for inductive circuits.*
*To ensure proper operation, do not exceed the voltage and current rating of ZIPLink module. ZL-RFU20 = 2A per circuit; ZL-RFU40 = 400 mA per circuit.*

# I/O Modules to *ZIP*Link Connector Modules - Productivity2000

## Analog Input Modules

| Productivity2000 Analog Input Module ZIPLink Selector | | | | |
|---|---|---|---|---|
| ***I/O Analog Module*** | ***ZIPLink Parameters*** | | | |
| | # of Terms | Component | Part No. | Cable Part No. |
| ***P2-04AD*** | 18 | Feedthrough | ZL-RTB20 (-1) | ZL-P2-CBL18 * |
| ***P2-04AD-1*** | | | | |
| ***P2-04AD-2*** | | | | |
| ***P2-08AD-1*** | | | | |
| ***P2-08AD-2*** | | | | |
| ***P2-08ADL-1*** | | | | |
| ***P2-08ADL-2*** | | | | |
| ***P2-16AD-1*** | 24 | | | ZL-P2-CBL24 * |
| ***P2-16AD-2*** | | | | |
| ***P2-16ADL-1*** | | | | |
| ***P2-16ADL-2*** | | | | |
| ***P2-06RTD*** | Matched Only | See Note 1 | | |
| ***P2-08THM*** | T/C Wire Only | See Note 1 | | |
| ***P2-08NTC*** | Copper Conductors | See Note 1 | | |

** Select the cable length by replacing the * with: Blank = 0.5 m, -1 = 1.0 m, or -2 = 2.0 m.*
*1. These modules are not supported by the ZIPLink wiring system.*

## Analog Output Modules

| Productivity2000 Analog Output Module ZIPLink Selector | | | | |
|---|---|---|---|---|
| ***I/O Analog Module*** | ***ZIPLink Parameters*** | | | |
| | # of Terms | Component | Part No. | Cable Part No. |
| ***P2-04DA*** | 18 | Feedthrough | ZL-RTB20 (-1) | ZL-P2-CBL18 * |
| ***P2-04DA-1*** | | | | |
| ***P2-04DA-2*** | | | | |
| ***P2-04DAL-1*** | | | | |
| ***P2-04DAL-2*** | | | | |
| ***P2-08DA-1*** | | | | |
| ***P2-08DA-2*** | | | | |
| ***P2-08DAL-1*** | | | | |
| ***P2-08DAL-2*** | | | | |
| ***P2-16DA-1*** | 24 | | | ZL-P2-CBL24 * |
| ***P2-16DA-2*** | | | | |
| ***P2-16DAL-1*** | | | | |
| ***P2-16DAL-2*** | | | | |
| ***P2-8AD4DA-1*** | 18 | | | ZL-P2-CBL18 * |
| ***P2-8AD4DA-2*** | | | | |

# I/O Modules

A variety of discrete, analog and specialty I/O modules are available for use in a Productivity2000 system. Specifications for each module are on the following pages.

A filler module is available for unused I/O module slots (part number P2-FILL).

## Discrete Input Modules

| Productivity2000 Discrete Input Modules | | | |
|---|---|---|---|
| **Part Number** | **Number of Inputs** | **Description** | **Price** |
| P2-08SIM | 8 | Input Simulator Module | |
| P2-08ND3-1 | 8 | Sinking/Sourcing 12–24 VDC | |
| P2-16ND-TTL | 16 | Sinking/Sourcing | |
| P2-16ND3-1 | 16 | Sinking/Sourcing 24V AC/DC | |
| P2-32ND3-1 | 32 | Sinking/Sourcing 12–24 VDC | |
| P2-08NE3 | 8 | Sinking/Sourcing 24V AC/DC | |
| P2-16NE3 | 16 | Sinking/Sourcing 12–24 VDC | |
| P2-32NE3 | 32 | Sinking/Sourcing 24V AC/DC | |
| P2-08NAS | 8 | AC Isolated 100-120 VAC | |
| P2-16NA | 16 | AC 100-240 VAC | |

## Specialty Modules

| Productivity2000 Specialty Modules | | | |
|---|---|---|---|
| **Part Number** | **Number of Channels** | **Description** | **Price** |
| P2-HSI | 2 | High-Speed Input | |
| P2-HSO** | 2 | High-Speed Output | |
| P2-02HSC | 2 | High-Speed Counter | |
| P2-04PWM | 4 | Pulse-Width Modulation | |
| P2-SCM | 4 ports | Serial Communications Module | |

*** ZIPLink required.*

## Analog Output Modules

| Productivity2000 Analog Output Modules | | | |
|---|---|---|---|
| **Part Number** | **Number of Channels** | **Description** | **Price** |
| P2-04DA | 4 | Analog Output (Voltage/Current) | |
| P2-04DA-1 | 4 | Analog Output (Current) | |
| P2-04DA-2 | 4 | Analog Output (Voltage) | |
| P2-04DAL-1* | 4 | Analog Output (Current) | |
| P2-04DAL-2* | 4 | Analog Output (Voltage) | |
| P2-08DA-1 | 8 | Analog Output (Current) | |
| P2-08DA-2 | 8 | Analog Output (Voltage) | |
| P2-08DAL-1* | 8 | Analog Output (Current) | |
| P2-08DAL-2* | 8 | Analog Output (Voltage) | |
| P2-16DA-1 | 16 | Analog Output (Current) | |
| P2-16DA-2 | 16 | Analog Output (Voltage) | |
| P2-16DAL-1* | 16 | Analog Output (Current) | |
| P2-16DAL-2* | 16 | Analog Output (Voltage) | |

** Low resolution analog modules without OLED display.*

## Discrete Output Modules

| Productivity2000 Discrete Output Modules | | | |
|---|---|---|---|
| **Part Number** | **Number of Outputs** | **Description** | **Price** |
| P2-08TD1S | 8 | Isolated Sinking | |
| P2-08TD2S | 8 | Isolated Sourcing | |
| P2-15TD1 | 15 | Sinking | |
| P2-15TD2 | 15 | Sourcing | |
| P2-08TD1P | 8 | Sinking Protected | |
| P2-08TD2P | 8 | Sourcing Protected | |
| P2-16TD-TTL | 16 | Sourcing | |
| P2-16TD1P | 16 | Sinking Protected | |
| P2-16TD2P | 16 | Sourcing Protected | |
| P2-32TD1P | 32 | Sinking Protected | |
| P2-32TD2P | 32 | Sourcing Protected | |
| P2-08TAS | 8 | Isolated AC | |
| P2-16TA | 16 | 100-240 VAC Output | |
| P2-06TRS | 6 | Isolated Relay | |
| P2-08TRS | 8 | Isolated Relay | |
| P2-16TR | 16 | Relay | |

## Analog Input Modules

| Productivity2000 Analog Input Modules | | | |
|---|---|---|---|
| **Part Number** | **Number of Channels** | **Description** | **Price** |
| P2-04AD | 4 | Analog Input (Voltage/Current) | |
| P2-04AD-1 | 4 | Analog Input (Current) | |
| P2-04AD-2 | 4 | Analog Input (Voltage) | |
| P2-08AD-1 | 8 | Analog Input (Current) | |
| P2-08AD-2 | 8 | Analog Input (Voltage) | |
| P2-08ADL-1* | 8 | Analog Input (Current) | |
| P2-08ADL-2* | 8 | Analog Input (Voltage) | |
| P2-16AD-1 | 16 | Analog Input (Current) | |
| P2-16AD-2 | 16 | Analog Input (Voltage) | |
| P2-16ADL-1* | 16 | Analog Input (Current) | |
| P2-16ADL-2* | 16 | Analog Input (Voltage) | |
| P2-06RTD | 6 | Analog RTD Input | |
| P2-08NTC | 8 | Analog Thermocouple Input | |
| P2-08THM | 8 | Analog Thermistor Input | |

| Productivity2000 Analog Input/Output Modules | | | |
|---|---|---|---|
| **Part Number** | **Number of Channels** | **Description** | **Price** |
| P2-8AD4DA-1 | 8/4 | Analog Input/Output (Current) | |
| P2-8AD4DA-2 | 8/4 | Analog Input/Output (Voltage) | |

# I/O Module Installation Procedure

**WARNING:** ***DO NOT APPLY FIELD POWER UNTIL THE FOLLOWING STEPS ARE COMPLETED. SEE HOT-SWAP PROCEDURE FOR EXCEPTIONS.***

**Step One:** Align module catch with base slot and module into connector.

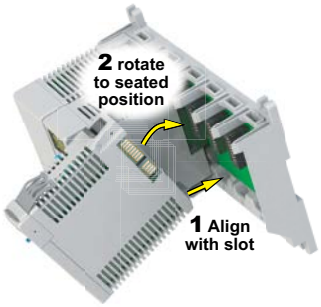


**Step Two:** Pull top locking tab toward module face. Click indicates lock is en- gaged.

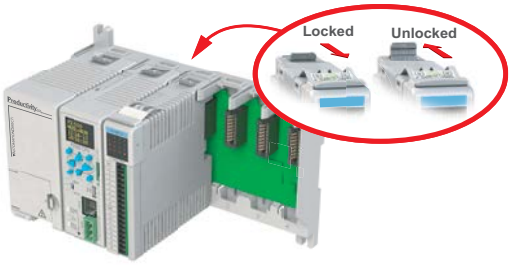


**Step Three:** Attach field wiring using removable terminal block or ZIPLink wiring system.

**WARNING:** ***EXPLOSION HAZARD – DO NOT CONNECT OR DISCONNECT CONNECTORS OR OPERATE SWITCHES WHILE CIRCUIT IS LIVE UNLESS THE AREA IS KNOWN TO BE NON-HAZARDOUS. DO NOT HOT-SWAP MODULES UNLESS THE AREA IS KNOWN TO BE NON-HAZARDOUS.***