Specialty Modules

P2-HSI

High-Speed Pulse Input

The P2-HSI is a high-speed pulse (1MHz) input module with differential (line receiver, 5V max.) and single ended (5–24 V) inputs that accept up to 1MHz of pulse/direction and quadrature signals on each of the two independent input channels. It also provides four general purpose high-speed inputs and four general purpose 5–24 VDC 0.5 amp outputs.

No terminal block sold for this module; ZIPLink required.

NOTE: The most recent Productivity Suite software and firmware versions may be required to support new modules and new features.

See Wiring Solutions for part numbers of ZIPLink cables and connection modules required with this I/O module.

General Specifications	
Module Type	Intelligent
Modules per Base	15 Maximum (See Note)
I/O Points Used	None, mapped directly to tags in CPU
Operating Temperature	0º to 60ºC (32º to 140ºF)
Storage Temperature	-20º to 70ºC (-4º to 158ºF)
Humidity	5 to 95% (non-condensing)
Environmental Air	No corrosive gases permitted
Vibration	IEC 60068-2-6 (Test Fc)
Shock	IEC 60068-2-27 (Test Ea)
Field to Logic Side Isolation	1800VAC applied for 1 second
Insulation Resistance	>10MΩ @ 500VDC
Heat Dissipation	5.76 W
Enclosure Type	Open equipment
Module Location	Any I/O slot in a Productivity2000 system
Field Wiring	Use ZIPLink wiring system ONLY. See Wiring Solutions.
Weight	90g (3.2 oz)
Agency Approvals**	UL 61010-1 and UL 61010-2-201 File E139594, Canada & USA CE (EN 61131-2 EMC, EN 61010-1 and EN 61010-2-201 Safety)*

**Meets EMC and Safety requirements. See the Declaration of Conformity for details.*
***To obtain the most current agency approval information, see the Agency Approval Checklist section on the specific component part number web page.*

Status LEDs	
Fault Status LEDs*	(F) 1, 2, 3 & 4 (one per status output)
Input LEDs	(IN) 1A, 1B, 1Z, 2A, 2B, 2Z, IN3 & IN4 (one per status input)
Output Status LEDs	(O) OUT1, OUT 2, OUT3 & OUT4

** All front panel fault LED's blinking indicates loss of 24VDC external power to the module.*

Connector Specifications	
Connector Type	IDC style header with latch, Omron XG4A-4034
Number of Pins	40 point
Pitch	0.1 in (2.54 mm)

Power Specifications	
External Power	24VDC -15% / +10%, Class 2
Maximum Voltage	26.4 VDC
Minimum Voltage	20.4 VDC
Current Consumption Excluding Outputs	50mA
Maximum Current Consumption Total of the 4 Status Outputs	2A

Specialty Modules

P2-HSI (cont'd)

Status Inputs

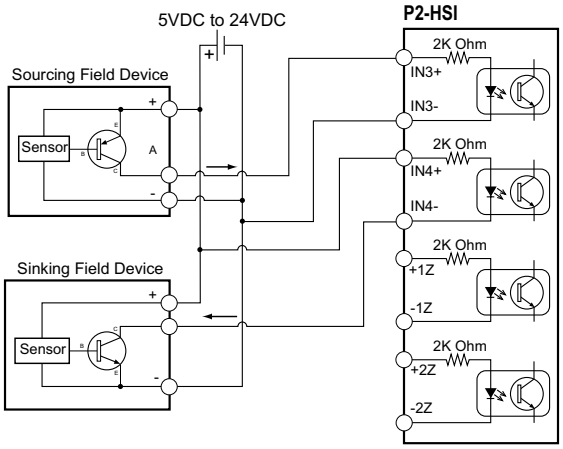

Single Ended (5-24V) Input Specifications	
Status Input	Single ended inputs (8 pts: 1A, 1B, 1Z, 2A, 2B, 2Z, 3IN, 4IN)
Isolation	Each input is isolated from other circuits
Input Volts Range	5–24 VDC
Input Volts Maximum	±34VDC, limited by protection
Input Impedance	1kΩ minimum, 5kΩ maximum
Input Rated Current	5–24 VDC, 16mA 5.2 mA typical @ 5VDC 22mA maximum @ 34VDC
Input Minimum ON Voltage	4.5 VDC
Input Maximum OFF Voltage	2.0 VDC
Input Minimum ON Current	5.0 mA
Input Maximum OFF Current	1.4 mA
OFF to ON Response Time	1A, 1B, 2A, 2B: 0.48 µs 1Z, 2Z, 3IN, 4IN: 6µs
ON to OFF Response Time	1A, 1B, 2A, 2B: 0.48 µs 1Z, 2Z, 3IN, 4IN: 6µs
Max. Input Frequency*	1A, 1B, 2A, 2B: 1MHz 1Z, 2Z, 3IN, 4IN: 200kHz

** Inputs are not limited to this speed but single ended signals are not usually reliable above 200 kHz due to cabling capacitance.*

Status Outputs

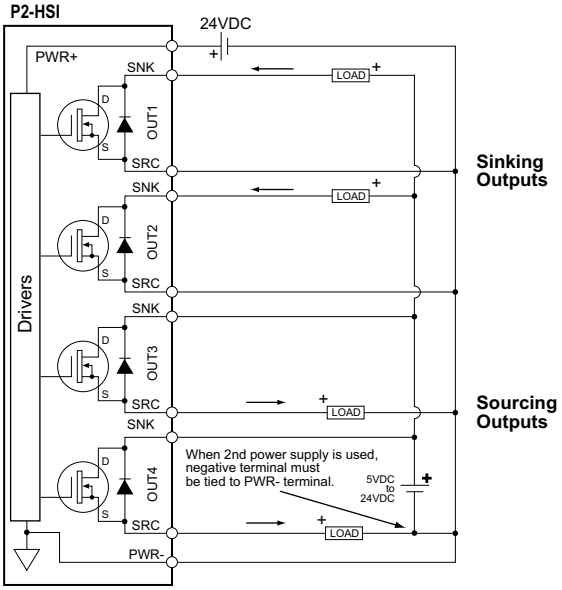

Status Output Specifications		
Status Outputs	4 sink/source	
Output Signal Type, per Channel Select	Current Sinking	Current Sourcing
Operating Voltage[1]	5–24 VDC	5–24 VDC[1]
Output Volts Maximum	36VDC	26.4 VDC[1]
Output Current Maximum	500mA	
Overcurrent Protection	Short circuit detect and current limit with automatic retry for each output	
Output Self Limiting Current	1.2 to 2.4 A	
Max Inrush Current	Self limited	
Output Voltage Drop	0.7 VDC @ 0.5 A	
Thermal Protection	Independent over temperature protection each output	
Output Voltage Clamp During Inductive Switching	+45VDC	-20VDC
Maximum OFF to ON Response	25µs[2]	
Maximum ON to OFF Response	25µs[2]	

NOTES:
1. Operating voltage of current sourcing outputs must be no greater than external power.
2. Measured at 5VDC operating voltage, 0.5 A load curent.

Specialty Modules

P2-HSI (cont'd)

Differential (5V) Input Specifications	
Pulse Inputs*	Differential inputs (6 pts: 1A, 1B, 1Z, 2A, 2B, 2Z)
Isolation	Each input is isolated from other circuits
Input Signal Type, per Channel Select	Differential
Input Volts	5VDC
Input Volts Maximum	±5.6 VDC, limited by protection
Input Impedance	200Ω minimum, 500Ω maximum
Inputs Rated Current	5VDC, 15mA (8mA typical, 15mA maximum)
Input Minimum ON Voltage	3.0 VDC
Input Maximum OFF Voltage	1.0 VDC
Input Minimum ON Current	5.0 mA
Input Maximum OFF Current	2.0 mA
OFF to ON Response Time	1A, 1B, 2A, 2B: 0.48 µs 1Z, 2Z, 3IN, 4IN: 6µs
ON to OFF Response Time	1A, 1B, 2A, 2B: 0.48 µs 1Z, 2Z, 3IN, 4IN: 6µs
Max. Input Frequency*	1A, 1B, 2A, 2B: 1MHz 1Z, 2Z, 3IN, 4IN: 200kHz

** The Z pulse input (1Z & 2Z) is capable of capturing a 1MHz wide pulse for the purpose of resetting an encoder count but a 3 microsecond pause (300kHz) is required between pulses.*
Note: The voltage difference between the input pairs must be between 3–5.6 volts.

5V Encoder Inputs

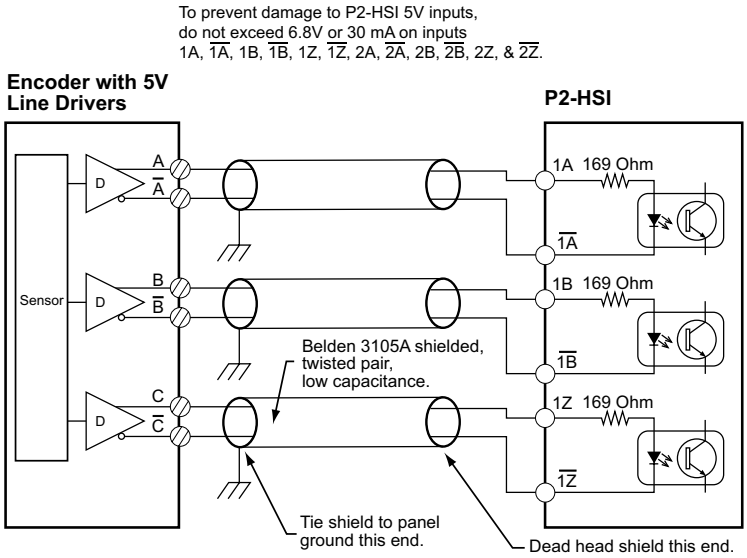

Specialty Modules

P2-HSI (cont'd)

24V Encoder Inputs

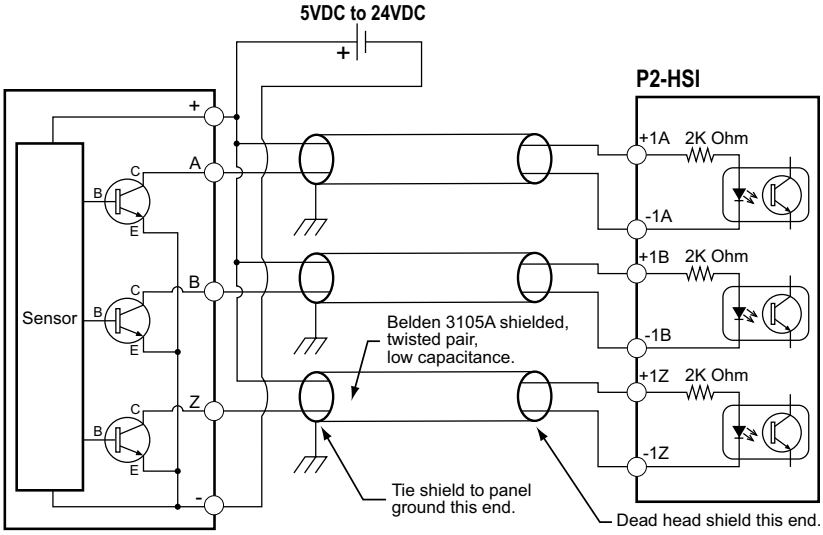

Sinking I/O Wiring Diagram

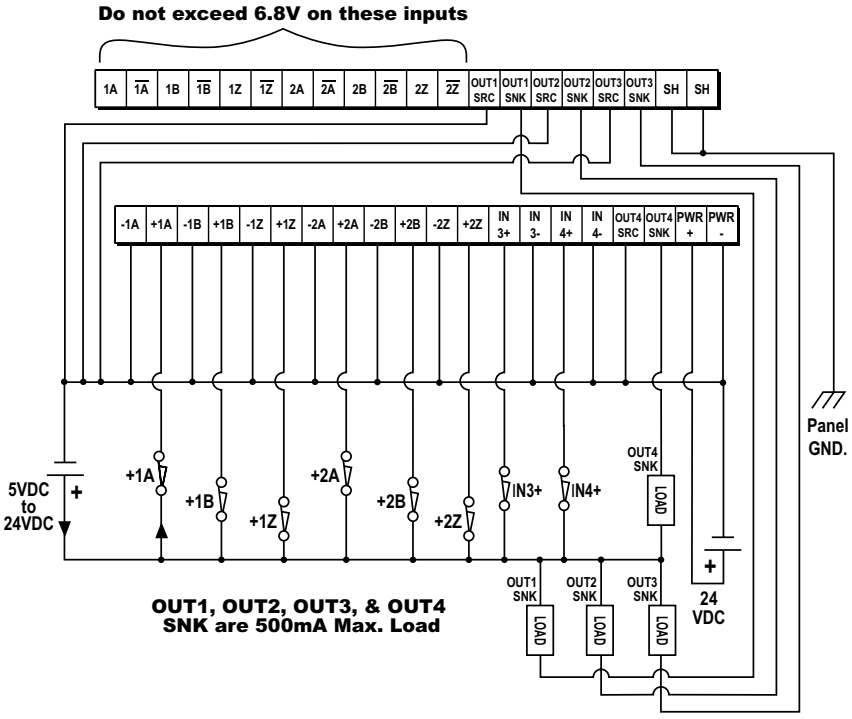

Specialty Modules

P2-HSI (cont'd)

Sourcing I/O Wiring Diagram

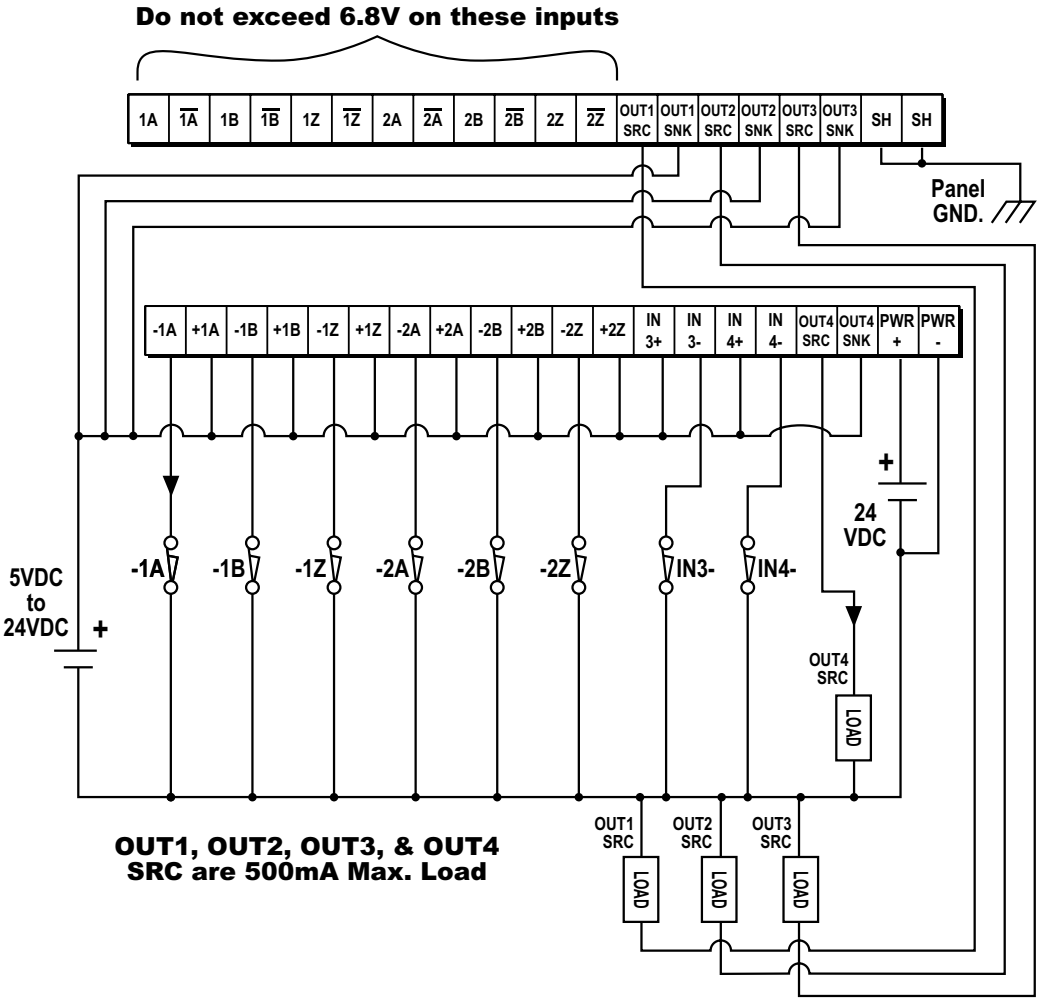

Specialty Modules

P2-HSI (cont'd)

Frequency Response

Inaccuracy of Frequency Measurements[1,2] for "Fast Mode"				
Input Frequency	***Sampling Period***	***Step/Dir***	***Quadrature 1X***	***Quadrature 4X***
1Hz	±1 Second	±1Hz	±1 Hz	±1 Hz
10Hz				
100Hz				
1kHz				
10kHz				
100kHz				
1MHz				

Resolution of Frequency Measurements for "Fast Mode"		
Input Frequency	***Sampling Period***	***Resolution***
1 Hz to 1 MHz	1000ms	±1Hz
10 Hz to 1 MHz	100ms	±10Hz
100 Hz to 1 MHz	10ms	±100Hz
1 MHz	1ms	±1000Hz

Inaccuracy of Frequency Measurements[1,2] for "Slow Mode"			
Input Frequency	***Step/Dir***	***Quadrature 1X***	***Quadrature 4X***
1Hz	±0.002 Hz	±0.002 Hz	±0.002 Hz
10Hz	±0.009 Hz	±0.009 Hz	±0.009 Hz
100Hz	±0.015 Hz	±0.015 Hz	±0.015 Hz
1kHz	±1Hz	±1Hz	±1Hz
10kHz	±100Hz	±100Hz	±100Hz
100kHz	±1000Hz	±1000Hz	±1000Hz
1MHz	±40000Hz	±40000Hz	±40000Hz

Inaccuracy of Frequency Measurements[1,2,3,4] for "Auto Mode"			
Input Frequency	***Step/Dir***	***Quadrature 1X***	***Quadrature 4X***
1Hz	±1Hz	±1Hz	±1Hz
10Hz	±1Hz	±1Hz	±1Hz
100Hz	±1Hz	±1Hz	±1Hz
1kHz	±1Hz	±1Hz	±1Hz
10kHz	±100Hz	±100Hz	±100Hz
100kHz	±1000Hz	±1000Hz	±1000Hz
1MHz	±10000Hz	±10000Hz	±10000Hz

1. For stable input signal at given input frequency.
2. For total measurement error add the time base error to the tabulated error.
3. Maximum sample period: 1 second.
4. Minimum sample period: 0.001 seconds.

Inaccuracy of Frequency Measurements Due to Time Base Errors	
25 MHz Crystal for Time Base	
Inaccuracy at 25°C, Maximum	±30PPM
Inaccuracy 0–60°C, Referenced to 25°C	±30PPM
Inaccuracy Due to Aging, Maximum	±5PPM/Year
Max. Time Base Inaccuracy 0–60°C and 10 Years Operation	0.01%

Module Range:	Target position range ±2.147 billion (32-bit signed integer)

Wiring Solutions

Wiring Solutions using the ZIPLink wiring system

ZIPLinks eliminate the normally tedious process of wiring between devices by utilizing prewired cables and DIN rail mount connector modules. It's as simple as plugging in a cable connector at either end and terminating wires at only one end. Prewired cables keep installation clean and efficient, using half the space at a fraction of the cost of standard terminal blocks. There are several wiring solutions available when using the ZIPLink System ranging from CPU I/O-to-ZIPLink Connector Modules that are ready for field termination, options for connecting to third party devices, GS Series, DuraPulse and SureServo Drives, and specialty relay, transorb and communications modules. Pre-printed I/O-specific adhesive label strips for quick marking of ZIPLink modules are provided with ZIPLink cables. See the following solutions to help determine the best ZIPLink system for your application.

Solution 1: DirectLOGIC, CLICK, Productivity® 1000, Productivity® 2000 and Productivity3000® I/O Modules to ZIPLink Connector Modules

When looking for quick and easy I/O-to-field termination, a ZIPLink connector module used in conjunction with a prewired ZIPLink cable, consisting of an I/O terminal block at one end and a multi-pin connector at the other end, is the best solution.

Use the CPU I/O Modules to ZIPLink Connector Modules selector tables located in the ZIPLink Wiring Solutions section to:

1. Locate your I/O module/CPU,
2. Select a ZIPLink Module, and
3. Select a corresponding ZIPLink Cable.

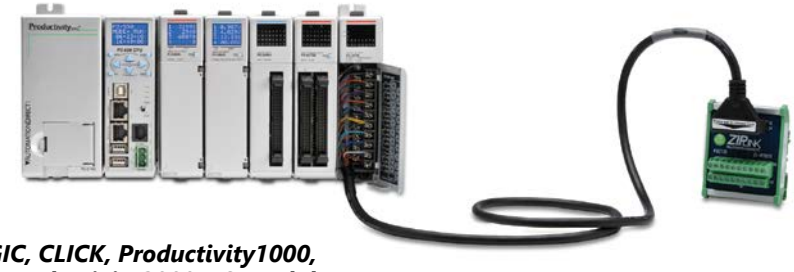

Solution 2: DirectLOGIC, CLICK, Productivity1000, Productivity2000 and Productivity3000 I/O Modules to 3rd Party Devices

When wanting to connect I/O to another device within close proximity of the I/O modules, no extra terminal blocks are necessary when using the ZIPLink Pigtail Cables. ZIPLink Pigtail Cables are prewired to an I/O terminal block with color-coded pigtail with soldered-tip wires on the other end.

Use the I/O Modules to 3rd Party Devices selector tables located in the ZIPLink Wiring Solutions section to:

1. Locate your CPU I/O module, and
2. Select a ZIPLink Pigtail Cable that is compatible with your 3rd party device.

Solution 3: GS Series and DuraPulse Drives Communication Cables

Need to communicate via Modbus RTU to a drive or a network of drives?

ZIPLink cables are available in a wide range of configurations for connecting to CPUs, SureServo, SureStep, Stellar Soft Starter and AC drives. Add a ZIPLink communications module to quickly and easily set up a multi-device network.

Use the Drives Communication selector tables located in the ZIPLink Wiring Solutions section to:

1. Locate your Drive and type of communications, and
2. Select a ZIPLink cable and other associated hardware.

Wiring Solutions

Solution 4: Serial Communications Cables

ZIPLink offers communications cables for use with DirectLOGIC, CLICK, Productivity1000, Productivity2000 and Productivity3000 CPUs, that can also be used with other communications devices. Connections include a 6-pin RJ12 or 9-pin, 15-pin and 25-pin D-Sub connectors which can be used in conjunction with the RJ12 or D-Sub Feedthrough modules.

Using the Serial Communications Cables selector table located in the ZIPLink Wiring Solutions section,

1. Locate your connector type
2. Select a cable.

Solution 5: Specialty ZIPLink Modules

For additional application solutions, ZIPLink Specialty Modules are available in a variety of configurations including stand-alone relays, 24VDC and 120VAC transorb modules, D-Sub, RJ12 and RJ45 feedthrough modules, communication port adapter and distribution modules, and SureServo 50-pin I/O interface connection.

Using the ZIPLink Specialty Modules selector table located in the ZIPLink Wiring Solutions section:

1. Locate the type of application.
2. Select a ZIPLink module.

Solution 6: ZIPLink Connector Modules to 3rd Party Devices

If you need a way to connect your device to terminal blocks without all that wiring time, then our pigtail cables with color-coded soldered-tip wires are a good solution. Used in conjunction with any compatible ZIPLink Connector Modules, a pigtail cable keeps wiring clean and easy and reduces troubleshooting time.

Use the Universal Connector Modules and Pigtail Cables table located in the ZIPLink Wiring Solutions section to:

1. Select module type,
2. Select the number of pins
3. Select cable.

I/O Modules to ZIPLink Connector Modules - Productivity2000

Discrete Input Modules

Productivity2000 Input Module ZIPLink Selector

I/O Input Module	ZIPLink Parameters			
	# of Terms	Component	Part No.	Cable Part No.
P2-08ND3-1	18	Feedthrough	ZL-RTB20 (-1)	ZL-P2-CBL18 *
P2-16ND3-1	18	Sensor/LED	ZL-LTB16-24-1	
P2-16ND-TTL	18	Feedthrough	ZL-RTB20 (-1)	
P2-08NE3				
P2-16NE3				
P2-32ND3-1	40	Feedthrough	ZL-RTB40 (-1)	ZL-CBL40 *
		Sensor/LED	ZL-LTB16-24-1	
P2-32NE3	40	Feedthrough	ZL-RTB40 (-1)	
P2-08NAS	8	Feedthrough	ZL-RTB20 (-1)	ZL-P2-CBL18 *
P2-16NA	18			

Specialty Modules

Productivity2000 Specialty & Motion Modules ZIPLink Selector

I/O Module	ZIPLink Parameters			
	# of Terms	Component	Part No.	Cable Part No.
P2-HSI	40	Feedthrough	ZL-RTB40 (-1)	ZL-CBL40-S ZL-CBL40-1S ZL-CBL40-2S
P2-HSO				
P2-02HSC	See Note 1			
P2-04PWM	18	Feedthrough	ZL-RTB20 (-1)	ZL-P2-CBL18 *
P2-08SIM	See Note 1			
P2-SCM	See Note 1			

Discrete Output Modules

Productivity2000 Output Module ZIPLink Selector

I/O Output Module	ZIPLink Parameters			
	# of Terms	Component	Part No.	Cable Part No.
P2-08TD1S	8	Feedthrough	ZL-RTB20 (-1)	ZL-P2-CBL18 *
P2-08TD2S	8			
P2-15TD1	15			
P2-15TD2	15			
P2-08TD1P	18			
P2-16TD-TTL	18			
P2-08TD2P	18			
P2-08TRS	18			
P2-08TAS	18			
P2-16TA	18	Feedthrough	ZL-RTB20 (-1)	
		Fuse	ZL-RFU20 [2]	
P2-16TD1P	18	Feedthrough	ZL-RTB20 (-1)	
		Relay (Sinking)	ZL-RRL16-24-1 ZL-RRL16W-24-1 ZL-RRL16F-24-1 ZL-RRL16HDF-24-1	
P2-16TD2P	18	Feedthrough	ZL-RTB20 (-1)	
		Relay (Sourcing)	ZL-RRL16-24-2 ZL-RRL16W-24-2 ZL-RRL16F-24-2 ZL-RRL16HDF-24-2	
P2-32TD1P	32	Feedthrough	ZL-RTB40 (-1)	ZL-CBL40 *
P2-32TD2P	32			
P2-16TR	18	Feedthrough	ZL-RTB20 (-1)	ZL-P2-CBL18 *
		Fuse	ZL-RFU20 [2]	

** Select the cable length by replacing the * with: Blank = 0.5 m, -1 = 1.0 m, or -2 = 2.0 m.*
1. These modules are not supported by the ZIPLink wiring system
2. Note: Fuses (5 x 20 mm) are not included. See Edison Electronic Fuse section for (5 x 20 mm) fuse. S500 and GMA electronic circuit protection for fast-acting maximum protection. S506 and GMC electronic circuit protection for time-delay performance. Ideal for inductive circuits.
To ensure proper operation, do not exceed the voltage and current rating of ZIPLink module. ZL-RFU20 = 2A per circuit; ZL-RFU40 = 400 mA per circuit.

I/O Modules to *ZIP*Link Connector Modules - Productivity2000

Analog Input Modules

Productivity2000 Analog Input Module ZIPLink Selector				
I/O Analog Module	***ZIPLink Parameters***			
	# of Terms	Component	Part No.	Cable Part No.
P2-04AD	18	Feedthrough	ZL-RTB20 (-1)	ZL-P2-CBL18 *
P2-04AD-1				
P2-04AD-2				
P2-08AD-1				
P2-08AD-2				
P2-08ADL-1				
P2-08ADL-2				
P2-16AD-1	24			ZL-P2-CBL24 *
P2-16AD-2				
P2-16ADL-1				
P2-16ADL-2				
P2-06RTD	Matched Only	See Note 1		
P2-08THM	T/C Wire Only	See Note 1		
P2-08NTC	Copper Conductors	See Note 1		

** Select the cable length by replacing the * with: Blank = 0.5 m, -1 = 1.0 m, or -2 = 2.0 m.*
1. These modules are not supported by the ZIPLink wiring system.

Analog Output Modules

Productivity2000 Analog Output Module ZIPLink Selector				
I/O Analog Module	***ZIPLink Parameters***			
	# of Terms	Component	Part No.	Cable Part No.
P2-04DA	18	Feedthrough	ZL-RTB20 (-1)	ZL-P2-CBL18 *
P2-04DA-1				
P2-04DA-2				
P2-04DAL-1				
P2-04DAL-2				
P2-08DA-1				
P2-08DA-2				
P2-08DAL-1				
P2-08DAL-2				
P2-16DA-1	24			ZL-P2-CBL24 *
P2-16DA-2				
P2-16DAL-1				
P2-16DAL-2				
P2-8AD4DA-1	18			ZL-P2-CBL18 *
P2-8AD4DA-2				

I/O Modules

A variety of discrete, analog and specialty I/O modules are available for use in a Productivity2000 system. Specifications for each module are on the following pages.

A filler module is available for unused I/O module slots (part number P2-FILL).

Discrete Input Modules

Productivity2000 Discrete Input Modules			
Part Number	**Number of Inputs**	**Description**	**Price**
P2-08SIM	8	Input Simulator Module	
P2-08ND3-1	8	Sinking/Sourcing 12–24 VDC	
P2-16ND-TTL	16	Sinking/Sourcing	
P2-16ND3-1	16	Sinking/Sourcing 24V AC/DC	
P2-32ND3-1	32	Sinking/Sourcing 12–24 VDC	
P2-08NE3	8	Sinking/Sourcing 24V AC/DC	
P2-16NE3	16	Sinking/Sourcing 12–24 VDC	
P2-32NE3	32	Sinking/Sourcing 24V AC/DC	
P2-08NAS	8	AC Isolated 100-120 VAC	
P2-16NA	16	AC 100-240 VAC	

Specialty Modules

Productivity2000 Specialty Modules			
Part Number	**Number of Channels**	**Description**	**Price**
P2-HSI	2	High-Speed Input	
P2-HSO**	2	High-Speed Output	
P2-02HSC	2	High-Speed Counter	
P2-04PWM	4	Pulse-Width Modulation	
P2-SCM	4 ports	Serial Communications Module	

*** ZIPLink required.*

Analog Output Modules

Productivity2000 Analog Output Modules			
Part Number	**Number of Channels**	**Description**	**Price**
P2-04DA	4	Analog Output (Voltage/Current)	
P2-04DA-1	4	Analog Output (Current)	
P2-04DA-2	4	Analog Output (Voltage)	
P2-04DAL-1*	4	Analog Output (Current)	
P2-04DAL-2*	4	Analog Output (Voltage)	
P2-08DA-1	8	Analog Output (Current)	
P2-08DA-2	8	Analog Output (Voltage)	
P2-08DAL-1*	8	Analog Output (Current)	
P2-08DAL-2*	8	Analog Output (Voltage)	
P2-16DA-1	16	Analog Output (Current)	
P2-16DA-2	16	Analog Output (Voltage)	
P2-16DAL-1*	16	Analog Output (Current)	
P2-16DAL-2*	16	Analog Output (Voltage)	

** Low resolution analog modules without OLED display.*

Discrete Output Modules

Productivity2000 Discrete Output Modules			
Part Number	**Number of Outputs**	**Description**	**Price**
P2-08TD1S	8	Isolated Sinking	
P2-08TD2S	8	Isolated Sourcing	
P2-15TD1	15	Sinking	
P2-15TD2	15	Sourcing	
P2-08TD1P	8	Sinking Protected	
P2-08TD2P	8	Sourcing Protected	
P2-16TD-TTL	16	Sourcing	
P2-16TD1P	16	Sinking Protected	
P2-16TD2P	16	Sourcing Protected	
P2-32TD1P	32	Sinking Protected	
P2-32TD2P	32	Sourcing Protected	
P2-08TAS	8	Isolated AC	
P2-16TA	16	100-240 VAC Output	
P2-06TRS	6	Isolated Relay	
P2-08TRS	8	Isolated Relay	
P2-16TR	16	Relay	

Analog Input Modules

Productivity2000 Analog Input Modules			
Part Number	**Number of Channels**	**Description**	**Price**
P2-04AD	4	Analog Input (Voltage/Current)	
P2-04AD-1	4	Analog Input (Current)	
P2-04AD-2	4	Analog Input (Voltage)	
P2-08AD-1	8	Analog Input (Current)	
P2-08AD-2	8	Analog Input (Voltage)	
P2-08ADL-1*	8	Analog Input (Current)	
P2-08ADL-2*	8	Analog Input (Voltage)	
P2-16AD-1	16	Analog Input (Current)	
P2-16AD-2	16	Analog Input (Voltage)	
P2-16ADL-1*	16	Analog Input (Current)	
P2-16ADL-2*	16	Analog Input (Voltage)	
P2-06RTD	6	Analog RTD Input	
P2-08NTC	8	Analog Thermocouple Input	
P2-08THM	8	Analog Thermistor Input	

Productivity2000 Analog Input/Output Modules			
Part Number	**Number of Channels**	**Description**	**Price**
P2-8AD4DA-1	8/4	Analog Input/Output (Current)	
P2-8AD4DA-2	8/4	Analog Input/Output (Voltage)	

I/O Module Installation Procedure

WARNING: ***DO NOT APPLY FIELD POWER UNTIL THE FOLLOWING STEPS ARE COMPLETED. SEE HOT-SWAP PROCEDURE FOR EXCEPTIONS.***

Step One: Align module catch with base slot and module into connector.

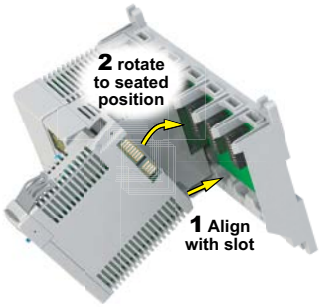

Step Two: Pull top locking tab toward module face. Click indicates lock is en- gaged.

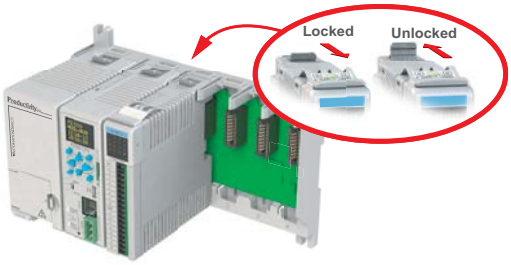

Step Three: Attach field wiring using removable terminal block or ZIPLink wiring system.

WARNING: ***EXPLOSION HAZARD – DO NOT CONNECT OR DISCONNECT CONNECTORS OR OPERATE SWITCHES WHILE CIRCUIT IS LIVE UNLESS THE AREA IS KNOWN TO BE NON-HAZARDOUS. DO NOT HOT-SWAP MODULES UNLESS THE AREA IS KNOWN TO BE NON-HAZARDOUS.***