CPU Modules

P3-550E

The P3-550E is a high-performance CPU having multiple communication ports which support USB, Ethernet and serial devices. Designed with a 4-line x 10-character LCD and remote I/O capability.

Each Productivity3000® system requires one CPU module to be mounted in the controller slot in the initial base system of the local base group. The CPU stores and executes the user's program.

The system can be expanded with the P3-RX or P3-EX module when using the P3-550E CPU. The local, expansion, and remote I/O are assigned as preconfigured or user-defined tag names that can be easily referenced in the ladder logic program.

NOTE: A replacement LCD display is available for the P3-550E. Order Part number P3-LCD.

P3-LCD

P3-550E

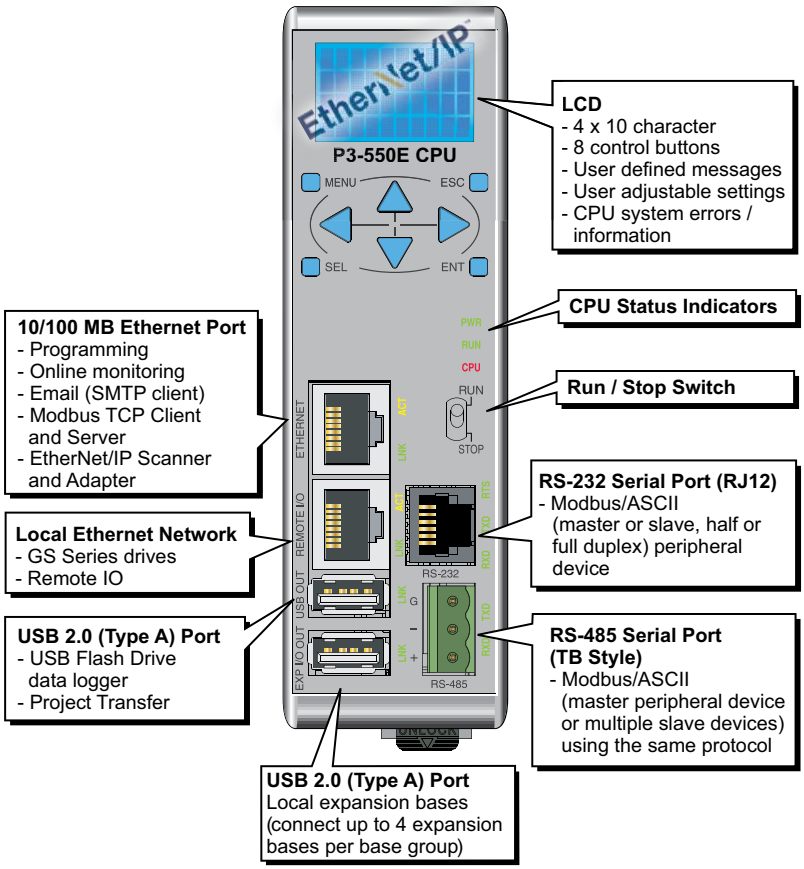

CPU Status Indicators	
PWR	Green LED is illuminated when power is on
RUN	Green LED is illuminated when CPU is in RUN mode
CPU	Red LED is illuminated during power on reset, power down, or watch-dog time-out.

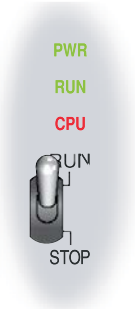

CPU Run/Stop Switch	
RUN position	Executes user program, run-time edits possible
STOP position	Does not execute user program, normal program load position

CPU Modules

P3-530

The P3-530 Basic is a high-performance CPU. Several communications ports support Ethernet and serial devices.

Each Productivity3000® system requires one CPU module mounted in the controller slot in the first base of the local base group. The CPU stores and executes the user's program.

The system can be expanded with the P3-EX module when using the P3-530 CPU. The local I/O are assigned preconfigured or user-defined tagnames which can be easily referenced in the ladder logic program.

P3-530

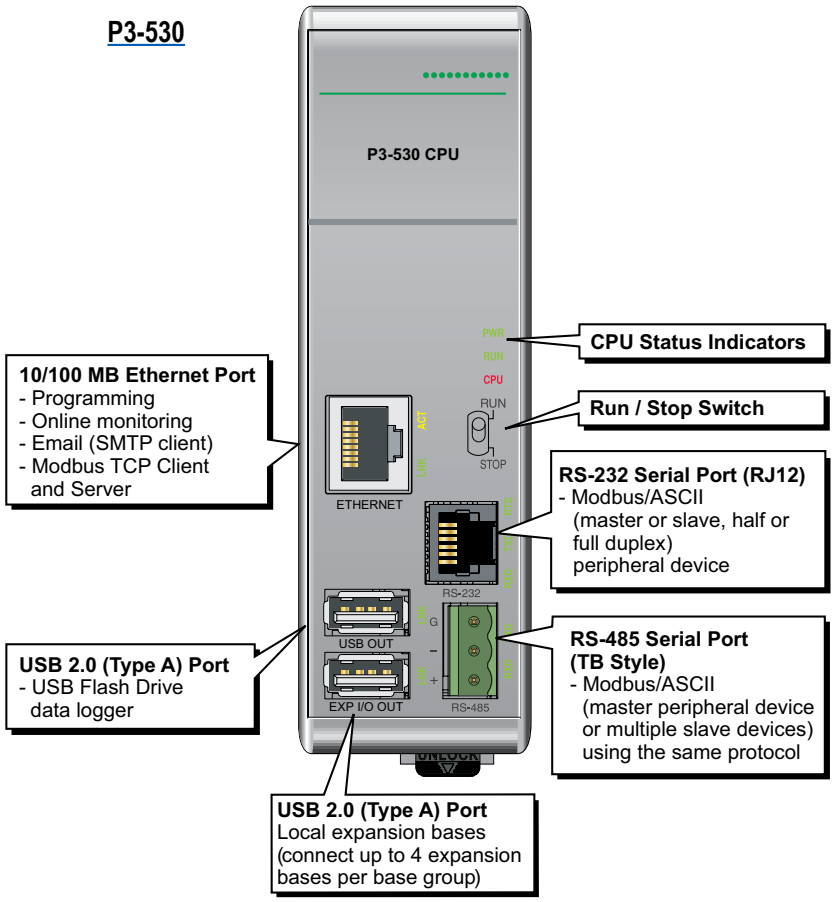

CPU Status Indicators	
PWR	Green LED is illuminated when power is on
RUN	Green LED is illuminated when CPU is in RUN mode
CPU	Red LED is illuminated during power on reset, power down, or watch-dog time-out.

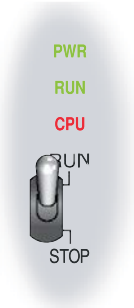

CPU Run/Stop Switch	
RUN position	Executes user program, run-time edits possible
STOP position	Does not execute user program, normal program load position

CPU Modules

Specifications (see notes below)

CPU Specifications	P3-550E	P3-530
User Memory	50MB (Includes program, data and documentation)	25MB (Includes program, data and documentation)
Memory Type	Flash and Battery Backed RAM	
Retentive Memory	492K	
Scan Time	600µs (3K Boolean, 1K I/O)	
Display	LCD, 4x10 characters, backlit, 8 control buttons; LCD characters are 5x7 with a dot pitch of 0.45 mm; 2.25 mm x 3.15 mm	N/A
Communications	N/A	
	ETHERNET: (10/100 Mbps Ethernet) Programming, Monitoring, Debug, Firmware, Email SMTP Client, Modbus TCP Client (32 slaves) and Server (32 masters), EtherNet/IP Scanner (128 Scanner connections) and Adapter (16 connections)	ETHERNET: (10/100 Mbps Ethernet) Programming, Monitoring, Debug, Firmware, Email SMTP Client, Modbus TCP Client (32 slaves) and Server (32 masters)
	REMOTE I/O: (10/100 Mbps Ethernet) 16 RX Remote Base Groups, and 32 GS EDRV100 (GS Drives)	N/A
	USB OUT: (2.0) Data Logging and Project Transfer using pen drive (USB-FLASH recommended)	USB OUT: (2.0) Data Logging using pen drive (USB-FLASH recommended)
	EXP I/O OUT: (2.0 Proprietary) 4 P3-EX Local Expansion Bases	
	RS-232: (RJ12, 1200–115.2k baud) Modbus RTU, ASCII full or half duplex	
	RS-485: Removable Terminal Included, (1200–115.2k baud) ASCII, Modbus	
Hardware Limits of System	17 Base Groups 1 Local P3-550E + 16 Remote (P3-RX) 5 Bases per Base Group 1 P3-550E or P3-RX + 4 Expansion (P3-EX) 85 Bases Total 1 (CPU) + 16 (Remote) + 68 (Expansion) 59,840 Hardware I/O Points (All 64-point I/O Modules) 32 GS Series Drives as Remote I/O	5 Bases Total 1 P3-530 + 4 Expansion (P3-EX) 3,520 Hardware I/O Points (All 64-point I/O Modules)
Instruction Types	Application Functions Array Functions Counters/Timers Communications Data Handling Drum Sequencers Math Functions PID Program Control String Functions System Functions Contacts Coils High Speed I/O	
Real Time Clock Accuracy	±5s per day typical at 25°C ambient: 1sec/day* ±15s per day maximum at 60°C ambient:2sec/day*	±5s per day typical at 25°C ±15s per day maximum at 60°C

**Revision B and higher.*

IMPORTANT!

Hot-Swapping Information
Note: This device cannot be Hot Swapped.

NOTES:
1. To utilize the 492K of retentive memory in the P3-550E rev. D or later CPU, you must use Productivity3000® software version 1.0.7.XX and firmware version 1.1.13.XX or later.
2. When using the P3-530 CPU, you must use Productivity3000 software version 1.0.7.XX and firmware version 1.1.13.XX or later.
3. For EtherNet/IP support in the P3-550E CPU, you must use ProductivitySuite software version 2.2.0.XX or later.

CPU Modules

General Specifications	
Operating Temperature	0°C– 60°C (32°F–140°F)
Storage Temperature	-20ºC–70ºC (-4ºF–158ºF)
Humidity	5 to 95% (non-condensing)
Environmental Air	No corrosive gases permitted
Vibration	IEC60068-2-6 (Test Fc)
Shock	IEC60068-2-27 (Test Ea)
Heat Dissipation	7W
Enclosure Type	Open equipment
Module Location	Controller slot in the local base in a Productivity3000 system
Weight	260g (9oz)
Agency Approvals	UL508 file E157382, Canada & USA UL1604 file E200031, Canada & USA CE (EN61131-2*) This equipment is suitable for use in Class 1, Division 2, Groups A, B, C and D or non-hazardous locations only.

Meets EMC and Safety requirements. See the Declaration of Conformity for details.

NOTE: When using the P3-550E CPU, you must use Productivity Suite software version 2.2.0.XX or later.

P3-550E/P3-530 Product Comparison		
CPU	***P3-550E***	***P3-530***
LCD Display	✓	
USB Prog/Mon Port		
Ethernet Port	✓	✓
EtherNet/IP Protocol	✓	
Remote Expansion Port	✓	
USB Memory Stick Port	✓	✓
USB Local Expansion Port	✓	✓
RS-232 RJ12 Port	✓	✓
RS-485 Port	✓	✓
User Memory	50 MB	25 MB

CPU Modules

LCD Message Display P3-550E

The P3-550E CPU incorporates a 4-line x 10-character LCD Display for system alarms and information or for displaying user-defined messages.

LCD control buttons located beneath the display allow the user to navigate through a menu, and arrow buttons allow for configuration of time and date settings.

For user-defined messages, the display is configured using the Productivity Suite Programming Software. An LCD Page instruction allows the user to program text into user-defined tags and display the messages based on the ladder execution.

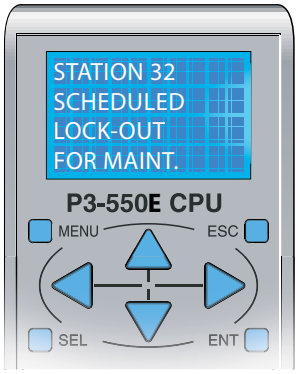

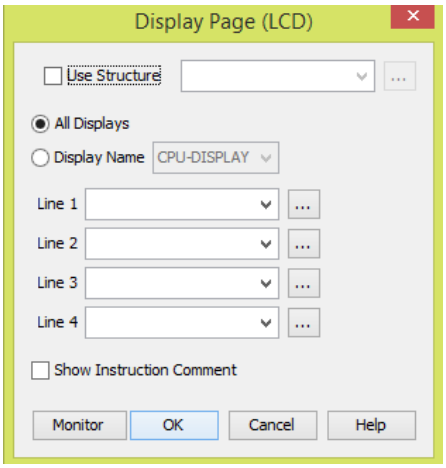

CPU Installation

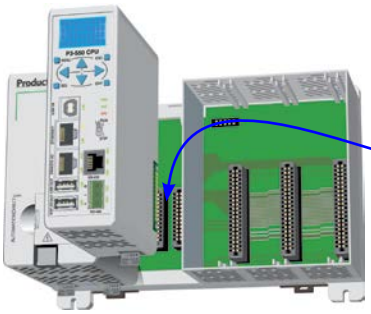

Step One:

Locate the two sockets next to the power supply; the CPU will be inserted into this location.

Step Two:

Insert the CPU at a 45° angle into the notch located at the top of the base and rotate down until seated.

Step Three:

Snap retaining tab into the locked position.

WARNING!: *EXPLOSION HAZARD – DO NOT CONNECT OR DISCONNECT CONNECTORS OR OPERATE SWITCHES WHILE CIRCUIT IS LIVE UNLESS THE AREA IS KNOWN TO BE NON-HAZARDOUS. DO NOT HOT SWAP.*

Battery (Optional)

A battery is included with some CPUs, but is not installed. The battery can be installed to retain the Time and Date along with any Tagname values that are set up as retentive.

The battery is not needed for program backup.

Battery (Optional)	
D2-BAT-1	Coin type, 3.0V Lithium battery, 560mA, battery number CR2354

Step One:
Press spring lock and swing battery compartment away from CPU.

Step Two:
Insert battery and close compartment.