StrideLinx Remote Access Solution

SE-SL Series Industrial VPN Routers

LISTED ITE E495151

RoHS Compliant

verizon
Model SE-SL3011-4GG Only

AT&T and T-Mobile compatible with LTE router

StrideLinx Industrial VPN Router Models				
Part Number	*Price*	*Gigabit Ethernet*	*WiFi*	*4G LTE (2)*
SE-SL3001 (1)		✓		
SE-SL3011		✓		
SE-SL3011-WF		✓	✓	
SE-SL3011-4GG		✓		✓ (Global)

(1) SE-SL3001 does not support data logging or notifications.
(2) SIM card and data plan compatible with the frequencies and bands supported by the device and identified in the spec table are required for 4G LTE operation from the carrier. An M2M SIM card is configured with an amount of data and a duration of validity at the time of purchase.
Antennas required for WiFi and 4G models and must remain connected during operation.
WARNING: DO NOT insert or remove the SIM card when power is applied to the router.

Key features

- Gigabit port speed
- Wired, WiFi, or 4G LTE WAN connectivity
- Easy, secure VPN networking
- Available Notification and Data Logging service
- Available Service Level Agreement (SLA)

4G LTE Router Options	
Features	*SE-SL3011-4GG*
*Verizon**	Yes – Certified
AT&T	Yes – Tested
T-Mobile	Yes – Tested
International Frequency Bands	Yes, but not tested with carriers

*** Requires router firmware version 3.20 or later.**

The StrideLinx Platform is a secure and powerful VPN platform based on a worldwide network of servers. It is focused on delivering and enhancing innovative remote service. A typical StrideLinx setup is illustrated as follows.

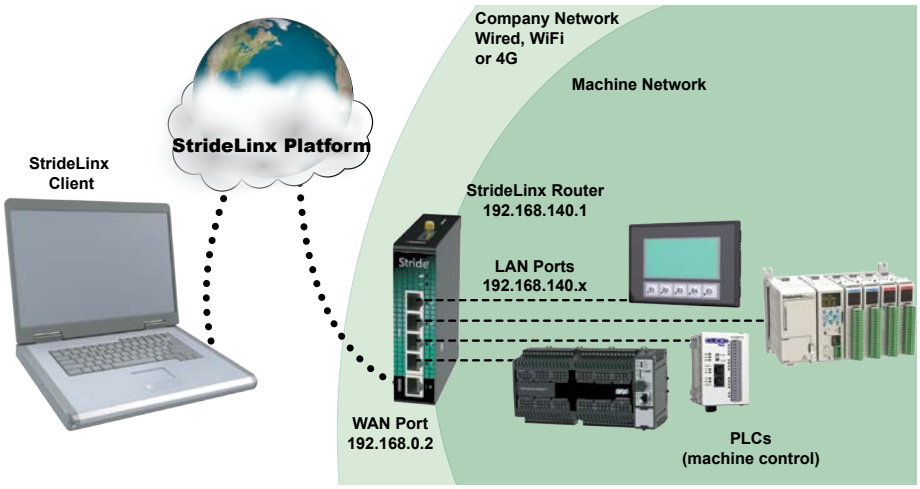

Please visit the StrideLinx page at AutomationDirect.com for an overview of the StrideLinx Remote Access Solution.

StrideLinx Remote Access Solution

SE-SL Series Industrial VPN Routers

Power Details	
Input Voltage	Class 2 LPS Power Supply, 12-24 VDC
Maximum Input Power	10W
Maximum Input Current	2A
Internal Voltage Protection	29V max
Reverse Polarity Protection	Yes
Isolation	1.5 kV

General Specifications	
USB	USB 2.0 (for configuration only)
Processor	MIPS 800MHz
Digital Input for Local Control	Yes
Operating Temperature Range	-20 to +65°C [-4 to +149°F]
Storage Temperature Range	-20 to +65°C [-4 to +149°F]
Relative Humidity	10 to 95% non-condensing
Operating Altitude	Up to maximum 2000m
Storage Altitude	Up to maximum 3000m
Environmental Air	For use in Pollution Degree 2 Environment. No corrosive gases permitted.
EMI	FCC CFR47 Part 15, EN55022/CISPR22, Class B
EMS	IEC61000-4-2 (ESD): ± 8kV (contact), ± 15kV (air) IEC61000-4-3 (RS): 10V/m (80MHz ~ 2GHz) IEC61000-4-4 (EFT): Power Port ± 4kV; Data Port: ± 2kV IEC61000-4-5 (Surge): Power Port: ± 2kV/DM, ± 4kV/CM; Data Port ± 2kV IEC61000-4-6 (CS): 10V (150kHz ~ 80MHz)
RoHS and WEEE	RoHS (Pb free) and WEEE compliant
Packaging and Protection	Metal case, IP20
Mounting	DIN rail
Weight	270–310 gram
Certification	CE, cULus, RoHS, REACH, AT&T (SE-SL3011-4G), FCC
Warranty	2 years
Agency Approvals	UL/cUL 60950-1, CE

WiFi Specifications (P/N SE-SL3011-WF Only)	
WiFi IEEE 802.11 Version	b/g/n
WiFi Modes	Station (Client) Mode and Access Point
Speed	72 Mbps
Antenna Connection	RP-SMA plug (male)
Antenna Connector Torque	3–5 lb·in [0.3–0.6 N·m]
FCC ID	XPYLILYW1

Ethernet Interface	
Ethernet ports	Five GbE (4x LAN, 1x WAN)
Port Type	Shielded RJ45
Auto-Crossover	Yes, allows you to use straight-through or crossover wired cables
Auto-Sensing Operation	Yes, full and half duplex
Auto-Negotiating Speed	Yes
Flow Control	Automatic
Operating Mode	Store and forward wire speed switching, non-blocking
Devices Supported	All IEEE 802.3 compliant devices are supported
Protection	Built-in 1.5 kV magnetic isolation
Cable Requirements	Twisted pair (Cat5e or better) (shielded recommended)
Max. Cable Distance	100 meters

4G LTE Specifications (P/N SE-SL3011-4G Only)	
Protocols and Frequencies (AT&T)	LTE-FDD - B2, B4, B12 WCDMA - B2, B4, B5
Speed	LTE-FDD - Max. 100 Mbps (DL)/Max. 50 Mbps (UL) WCDMA - Max. 384 kbps (DL)/Max. 384 kbps (UL)
Antenna Connection	Two (2) SMA plugs (male)
Antenna Connector Torque	3–5 lb·in [0.3–0.6 N·m]
SIM size	Standard SIM (2FF)
FCC ID	XMR201605EC25A

4G LTE Specifications (P/N SE-SL3011-4GG Only)	
Protocols and Frequencies (Global)	LTE FDD: B1,B2,B3,B4,B5,B7,B8,B12,B13,B18,B19, B20,B25,B26,B28 LTE TDD: B38,B39,B40,B41 WCDMA: B1,B2,B4,B5,B6,B8,B19 GSM: B2,B3,B5,B8 GPRS: B2,B3,B5,B8
Speed	LTE-FDD: Max. 150 Mbps (DL)/Max. 50 Mbps (UL) LTE-TDD: Max. 130 Mbps (DL)/Max. 30 Mbps (UL) WCDMA: Max. 384 kbps (DL)/Max. 384 kbps (UL) GSM (EDGE): Max. 296 kbps (DL)/Max. 236.8 kbps (UL) GPRS: Max 107 kbps (DL)/Max. 85.6 kbps (UL)
Antenna Connection	Two (2) SMA plugs (male)
Antenna Connector Torque	3–5 lb·in [0.3–0.6 N·m]
SIM size	Standard SIM (2FF)
FCC ID	XMR201903EG25G

StrideLinx Remote Access Solution

SE-SL Series Industrial VPN Routers

Dimensions

mm [inches]

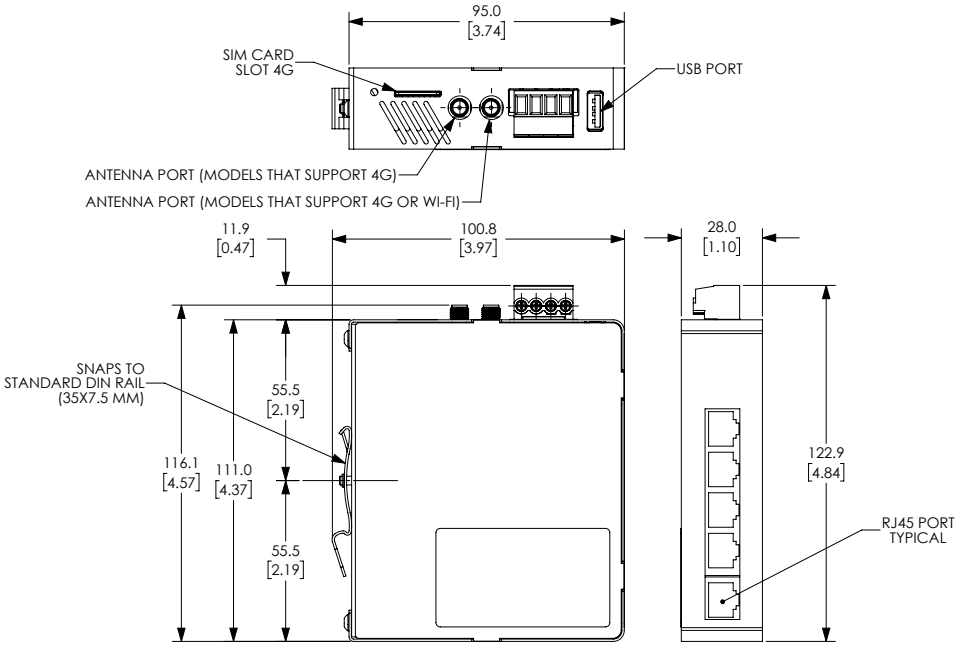

See our website: _____ for complete engineering drawings.

StrideLinx Remote Access Solution

Cellular Antennas for SE-SL3011-4GG Routers

SE-ANT110

STRIDE whip/tilt LTE antenna, connector mount.

SE-ANT130

STRIDE whip/straight LTE antenna, magnetic base mount, 9.8ft/3m cable length.

SE-ANT150

STRIDE dome LTE antenna, IP67, panel mount, 9.8ft/3m cable length.

4G LTE Antenna Specifications

	SE-ANT110	SE-ANT130*	SE-ANT150
Price			
Fits	SE-SL3011-4GG		
Antenna Connector	SMA (M)		
Application	LTE, CDMA, GSM, HSPA, UMTS, GPRS		
Impedance	50Ω		
Antenna Type	whip, tilt	whip, straight	dome
Cable Length	N/A	3m [9.8 ft]	3m [9.8 ft]
Frequency Range	700–960MHz / 1.71–3.8 GHz	700–960MHz / 1.71–3.5 GHz	700–960MHz / 1.71–2.7 GHz
Gain	-3.0 dBi / 0.9 dBi	-2.5dBi / 0.1dBi	1.2 dBi / 3.2 dBi
Height	2.84 in	13 in	1.89 in
IP Rating	–	–	IP67
Maximum Power	10W	50W	5W
Mounting Screw Torque	NA	NA	2.94 N·m

*** Gains listed are based on the antenna being mounted on a suitable ground plane.**

StrideLinx Remote Access Solution

Cellular Antennas for SE-SL3011-4G and SE-SL3011-4GG Routers

Dimensions

mm [inches]

SE-ANT110:

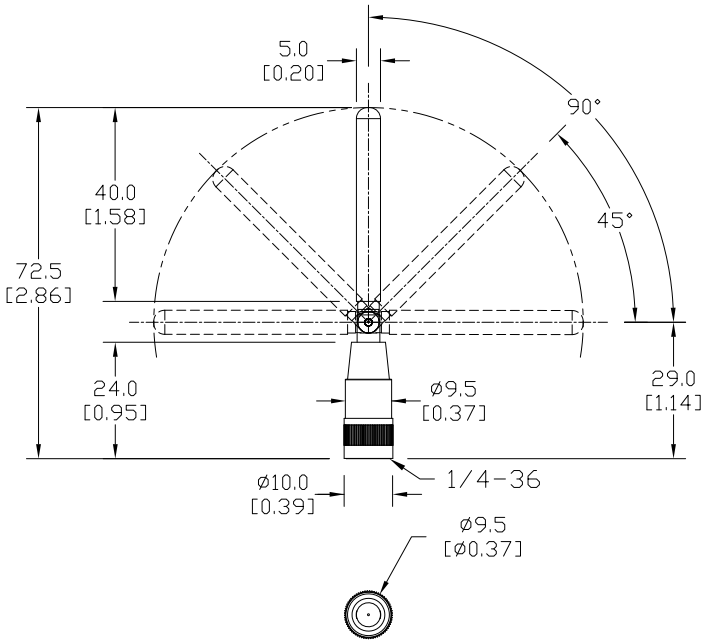

SE-ANT130:

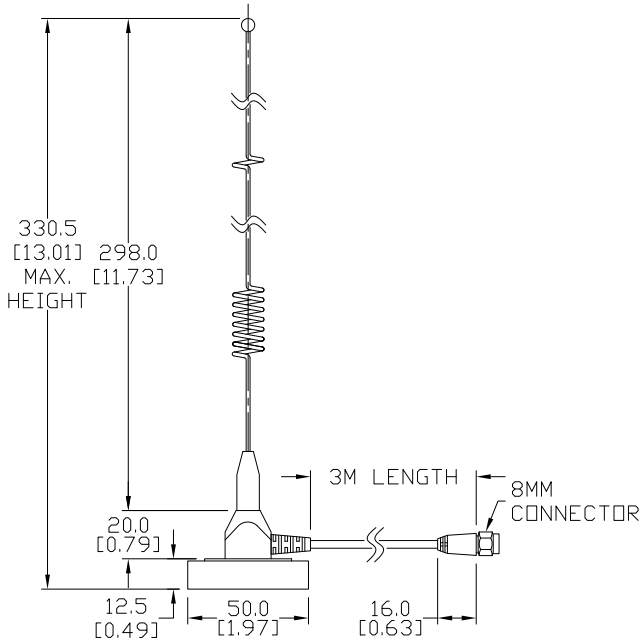

SE-ANT150:

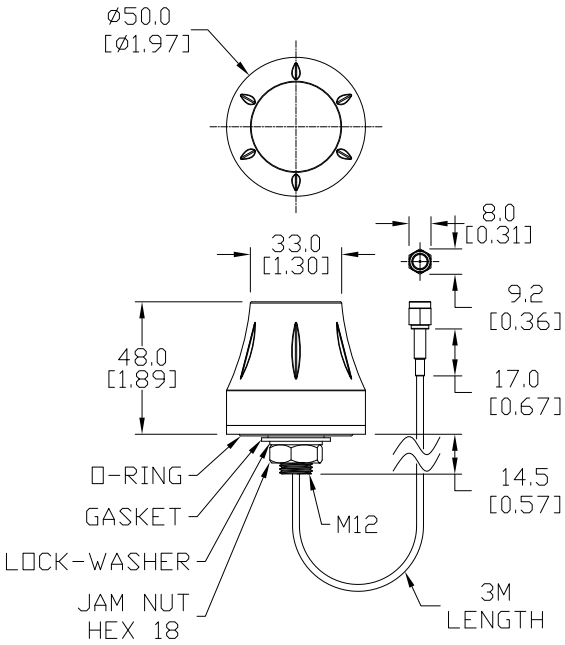

See our website: _____ for complete engineering drawings.

StrideLinx Remote Access Solution

2.4GHz WiFi Antennas for SE-SL3011-WF Routers (1 antenna required)

SE-ANT210

STRIDE whip/straight 2.4 GHz WiFi antenna, IP65, connector mount.

SE-ANT250

STRIDE dome 2.4 GHz WiFi antenna, IP67, panel mount, 9.8ft/3m cable length.

802.11 b/g/n 2.4 GHz WiFi Antenna Specifications		
	SE-ANT210	***SE-ANT250***
Price		
Fits	SE-SL3011-WF	
Antenna Connector	RP-SMA (M)	
Application	802.11 b/g/n	
Impedance	50Ω	
Antenna Type	whip, straight	dome
Cable Length	N/A	3m [9.8 ft]
Frequency Range	2.4–2.5 GHz	2.4–2.5 GHz
Gain	1.8 dBi	1.5 dBi
Height	1.2 in	1.89 in
IP Rating	IP65	IP67
Maximum Power	1W	5W
Mounting Screw Torque	NA	2.94 N·m

StrideLinx Remote Access Solution

2.4GHz WiFi Antennas for SE-SL3011-WF Routers

Dimensions

mm [inches]

SE-ANT210:

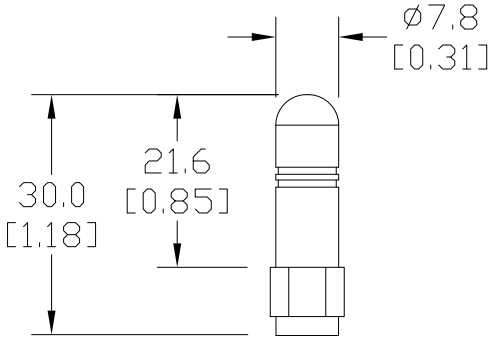

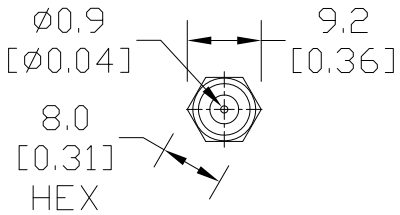

SE-ANT250:

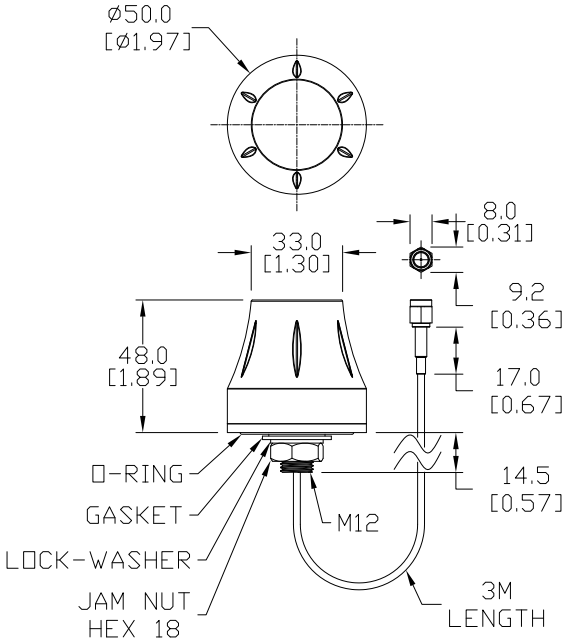

See our website: _____ for complete engineering drawings.

StrideLinx Remote Access Solution

Add-on Services – Add value to Remote Access

These licenses provide added services to your StrideLinx remote access. These are not needed for the basic function of the VPN remote access, but can be added to enhance the value of the platform to you and your customers.

Cloud Reporting licenses also include:

- unlimited cloud storage for up to 7 years with active license
- unlimited real time and user configurable dashboards
- unlimited data reports, and unlimited data tags per device

To see StrideLinx Cloud in action, please scan the QR code or visit https://go2adc.com/vpn-cloud and click the StrideLinx demo site link to sign up for an interactive product tour.

StrideLinx Cloud Logging and Reporting Licenses

Part #	Price	Description	Term	Data Logging Points/Hour	Data Retention	Features
SE-SLR010-1		StrideLinx Basic Reporting and Logging License	1 year	1,000	6 months	License includes email notification, data logging enabled at 1,000 data samples per hour with schedule reporting. For use with (1) StrideLinx router. Includes StrideLinx Notify License (#SE-SL021-1).
SE-SLR011-1		StrideLinx Professional Reporting and Logging License	1 year	10,000	7 years	License includes email notification, data logging enabled at 10,000 data samples per hour with schedule reporting. For use with (1) StrideLinx router. Includes StrideLinx Notify License (#SE-SL021-1).

WARNING: *DATA COLLECTED THROUGH CLOUD REPORTING WILL BE LOST IF YOUR LICENSE LAPSES. DATA FOR A SPECIFIC DEVICE WILL BE LOST IF A LICENSE IS REMOVED FROM THAT DEVICE. DATA IS ONLY STORED FOR THE DATA RETENTION DURATION OF YOUR LICENSE. IF DATA OLDER THAN THAT DURATION IS IMPORTANT, PLEASE ARCHIVE YOUR DATA LOCALLY BEFORE THE RETENTION LIMIT IS REACHED.*

StrideLinx Add-on Licenses

Part #	Price	Description	Term	Features
SE-SL021-1		StrideLinx Notify License	1 year	License includes alarm, trigger, recipient, and priority management with push and email notifications. For use with (1) StrideLinx router.
SE-SLR001-1		StrideLinx Professional License	1 year	License includes white label StrideLinx platform, unlimited VPN data traffic and advanced user and device access management. For use with (1) StrideLinx company.
SE-SL051		StrideLinx Mobile App Sustained Service License	1 year	License includes sustained service of white label StrideLinx iOS/Android mobile app with branding. For use with (1) existing white label StrideLinx iOS/Android mobile app. **ONLY AVAILABLE FOR EXISTING CUSTOM MOBILE APP USERS.**